Sanitary Sewer
and
Pumping Station Manual

Lexington-Fayette Urban County Government
Lexington, Kentucky

January 1, 2009

SECTION 1.0
INTRODUCTION
TABLE OF CONTENTS

Page

SECTION 2.0
DRAWING REQUIREMENTS

SECTION 3.0
CONSTRUCTION PROCEDURES
TABLE OF CONTENTS

Page

SECTION 4.0
FLOW DETERMINATION
TABLE OF CONTENTS

Page

SECTION 5.0
COMPUTER MODELING
TABLE OF CONTENTS

Page

SECTION 6.0
SANITARY SEWERS
TABLE OF CONTENTS

Page

SECTION 7.0
PUMPING STATIONS
TABLE OF CONTENTS

Page

SECTION 7.0
PUMPING STATIONS
TABLE OF CONTENTS
(Continued)

TABLE OF CONTENTS

APPENDICES

CHAPTER 1
INTRODUCTION

1.1 General

The Sanitary Sewer and Pumping Station Manual is one of seven manuals developed by the Lexington-Fayette Urban County Government (LFUCG) for the design and construction of infrastructure. The specific subjects of these manuals are:

- Procedures Manual for Infrastructure Development
- Stormwater
- Roadway
- Sanitary Sewer and Pumping Station
- Structures
- Geotechnical
- Construction Inspection

1.2 Purpose

The purpose of this manual is to provide information regarding design and construction requirements for sanitary sewers, pumping stations, and force mains in Fayette County. The goal is to provide uniform design and construction standards. The end result will be public infrastructure that is cost effective and maintainable by the LFUCG in the long term.

1.3 Structure of the Manual

The manual is composed of the following sections:

Section 2 - Drawing Requirements
Outlines the requirements for plans submitted to the LFUCG for sanitary sewers, pumping stations, and force mains.

Section 3 - Construction Procedures
Defines roles and responsibilities during the construction process and lists the construction inspection testing required.

Section 4 - Flow Determination
Provides the information necessary to calculate flows for sanitary sewers, pump stations, and force mains.

Section 5 - Computer Modeling
Discusses the status of computer modeling.

Section 6 - Sanitary Sewers
Provides the information necessary to properly design sanitary sewers and defines the requirements for utility easements.

Section 7 - Pumping Stations
Defines the classes of pumping stations and their requirements and the hydraulic design criteria to design pumping stations and force mains.

1.4 Definitions

AASHTO - An abbreviation for American Association of State Highway and Transportation Officials.

AWWA - An abbreviation for American Water Works Association.

Air Release Valve - Valve installed at high points to allow gases to escape.

ASTM - An abbreviation for American Society for Testing and Materials.

Backfill - The refilling of an excavation after a structure has been placed therein or the material placed in an excavation in the process of backfilling. In sewer construction, backfill refers to the material placed in the trench from the top of the pipe encasement or cap up to the ground or subgrade level.

Builder - The person(s) or firm who constructs a residential house, apartment, or commercial building(s) on part or all of a development.

Carrier Pipe - Sanitary or storm sewer piping slipped inside the installed casing pipe.

Casing Pipe - Steel pipe with continuous circumferential butt-welded joints, jacked into position during the boring operation.

Castings - Metallic objects (normally cast iron) formed of molten metal in a mold. Examples are manhole lids, manhole rims, catch basin grates, and frames, etc.

Check Valve - Valve that prevents fluid, such as sewage, from flowing backwards.

Cleanout - An upturned sewer pipe, generally placed at the end of the sewer, for providing means for inserting cleaning tools, for flushing, or for inserting an inspection light into the sewer.

Clearing - The cutting and removal of all trees, logs, and brush to about 1 foot above the ground surface.

Compaction - The act of compressing a given volume of material into a smaller volume by rolling, tamping, or wetting. In earthwork construction, subgrade preparation, and in paving, compaction is needed to increase the density, strength, and stability of the soil or bituminous concrete and decrease its permeability.

Construction Inspector - The individual who will provide the day-to-day, full-time inspection of a project under the direction of the Engineer.

Contractor - The person(s) or firm hired by the Developer or LFUCG to construct the infrastructure.

Control Panel - A panel with electrical controls for pump operations that generally includes an electrical pump operations display.

Cradle - Refers to bedding and haunching materials being laid upward from the trench bottom to the springline of the pipe.

Developer - The person(s) or firm that owns the land which is being developed and who is responsible for the construction of the infrastructure.

Development - The land which is being converted to a particular use and for which the infrastructure is being constructed.

DI - An abbreviation for Ductile Iron (piping).

Duplex - A pumping station containing two pumps.

Encasement - Class A concrete used to enclose a sewer in a trench. Encasement shall extend at least 6 inches all the way around the outside of the exterior wall of the pipe being encased.

Enclosure - The cabinet or specially designed box in which electrical controls and apparatus are housed. It is required to protect persons from live electrical parts and limit access to authorized personnel. It also provides mechanical and environmental protection.

Engineer - The engineering firm responsible for the design of the sanitary sewer, pumping station, and force main.

Exfiltration - The exit of sewage through faulty joints or cracks in pipes or manholes.

Force Main - A pipe under internal pressure created by being on the discharge side of a pumping station.

Gate Valve - Manual, screw-type, pipe valves within the discharge piping that isolate one or both of the discharge pipes from the force main during maintenance.

GPM (gpm) - An abbreviation for gallons per minute.

Grout - A fluid mixture of cement, sand, and water that can be poured or pumped easily.

Guide Rails - Steel tracks that align the boring equipment to the correct pipe direction and grade within the boring pit. Also includes the steel rails that align the submersible pumps to the discharge pipes.

Guide Rail System - A device that allows the submersible pump-motor unit to be installed in or removed from the wet well, without disconnecting any piping and without anyone having to enter the wet well.

Grubbing - The removal of all stumps and roots after the clearing operation.

Haunches - Pipe exterior below the springline to the outside bottom where crushed stone shall be hand placed and consolidated to provide uniform side and bottom support.

HDPE - An abbreviation for High Density Polyethylene (piping).

Home - Refers to condition that occurs when spigot or tongue end of pipe has been properly inserted into the bell or groove end. On PVC pipes, a reference mark is provided on the spigot end to indicate when the section of pipe has been pushed "home."

Infiltration - The entrance of groundwater into a sewer system through faulty joints or cracks in the pipes or manholes.

Invert - The lower portion of a sewer or structure; the portion that is below the springline and is concave upward. Also, the lowest point on the inside surface of a sewer is referred to as the invert, particularly in reference to the elevation or slope of the sewer.

Lag Pump - A succeeding or backup pump in a pump system. Control systems usually alternate pump operations between the lead and lag pumps.

Lateral - Sewer line from a residential unit to the collector sewer, consisting of two (2) components, the house lateral from the residential unit to the easement and/or R/W, and the sewer lateral from the easement and/or R/W to the collector sewer.

Lead Pump - The first pump to start in a pump cycle.

LFUCG - An abbreviation for the Lexington-Fayette Urban County Government.

Mandrel - A device used to check installed flexible pipe for excessive deflection (greater than 5%). A mandrel is specifically sized for the diameter of pipe to be tested. As the mandrel is pulled through the pipe, excessive deflection in the pipe will prevent its passage.

Manhole - A sewer appurtenance installed to provide: 1) access to sewers for inspection and maintenance; and 2) for changes in sewer direction, elevation, and grade.

Markers - Concrete or steel posts that identify force main alignments. Also includes metallic tape.

Maximum Dry Density - The maximum density obtained in a Proctor moisture-density test using a specific compactive effort and method of compaction specified by ASTM D 698 or ASTM D 1557.

Mercury Float Switches - Electrical mercury switches mounted in watertight, polyurethane-coated, steel shell, tilt bulbs suspended from the top slab of the wet well/pit that start/stop the pumps. Usually four switches control the pump operations.

Non-Submersible Pumps - Wastewater pumps used in dry pump chambers designed to operate in open air.

Optimum Moisture Content - The moisture content corresponding to the maximum dry density in a Proctor moisture-density test.

PVC - An abbreviation for Polyvinyl Chloride (piping).

Percent Compaction - The ratio, expressed as a percentage of: 1) dry unit weight of a soil as established in a job site embankment or backfill; 2) maximum unit weight obtained in a laboratory compaction test.

Plumber - The person(s) or firm that subcontracts with a builder to install the plumbing system in a building or house, including the lateral.

Precast - That which is formed in a mold or formed and distributed by the manufacturer as a complete unit.

Proctor Test - A laboratory compacting procedure whereby a soil at a known water content is placed in a specified manner into a mold of given dimensions, subjected to a compactive effort of controlled magnitude, and the resulting unit weight determined. The procedure is repeated for various water contents sufficient to establish a relation between water content and unit weight.

RCP - An abbreviation for Reinforced Concrete Pipe.

Record Drawings - Engineering plans that have been revised to reflect all changes to the plans that occurred during construction.

RPM - An abbreviation for Revolutions per Minute

Sanitary Sewer - A sewer that carries liquid and waterborne wastes from residences, commercial buildings, industrial plants, and institutions, together with minor quantities of ground, storm, and surface waters that are not admitted intentionally.

SDR - Abbreviation for the Standard Dimension Ratio expressed as the outside diameter of the pipe divided by the pipe wall thickness.

Sealing Flange - The connection between the pump discharge and force main when used with guide rail systems.

Service Pole - Utility pole providing electrical service, usually equipped with electric meter and telemetry enclosure.

Sewage - Largely the water supply of the common community after it has been fouled by various uses.

Sewer - A pipe or enclosed channel that carries wastewater or drainage water.

Slope - The gradient in feet per feet or expressed as percent.

Springline - The line on the outermost points on the side of a sewer. On a circular sewer, it would be the line on the points at half the diameter above the invert.

Station - A distance of 100 feet, measured along a centerline or baseline and designated by a stake bearing its number.

Storm Sewer - A sewer that carries storm water and surface water, street wash and other wash waters, or drainage, but excludes domestic wastewater and industrial wastes. Also called storm drain.

Stripping - The removal of topsoil or other material unsuitable for use in compacted earth fill, beneath foundations, or pavements.

Structural Fill - Selected fill material placed, compacted, and inspected according to specific density and moisture requirements.

Submersible Pumps - Submersible wastewater pumps are vertical, close-coupled, extra-heavy-duty pump and motor units that are designed to operate beneath the liquid they are pumping. They are non-clogging, usually having a 3-inch or larger discharge, and are also called submersible sewage pumps.

Support Bracket - Metal mounts that secure the discharge pipe(s) to the internal wall of the wet well.

TDH - An abbreviation for Total Dynamic Head.

Telemetering - The transmitting of alarm and control signals from remote pump station controls to a central monitoring location.

Topsoil - Soil at or below the ground surface, usually high in organic content and unsuitable for structural fill applications.

Trench - Usually a long, narrow, near vertical-sided cut in rock or soil such as is made for utility lines.

Trench Width - A specified minimum or maximum horizontal trench dimension which shall be maintained from below the pipe to at least one foot above the top of pipe.

TV Survey - Inspection method for PVC sanitary sewers where a video camera and skid assembly is pulled through a pipe section.

Valve Vault - Precast or cast-in-place concrete structure housing gate valves, check valves, and air release valves.

Volute - The casing of a centrifugal pump made in the form of a spiral or volute as an aid to the partial conversion of the velocity energy into pressure head as the water leaves the impeller.

Wet Well - An underground concrete storage tank for the temporary storage of sewer influent and containment of submersible pumps, piping, and float bulb switches.

1.5 References

Design Manual, Louisville and Jefferson County Metropolitan Sewer District (MSD), Revised Edition, 1995.

Lexington/Fayette Urban County Sanitary Sewer Pumping Stations; General Requirements for Administration, Design and Construction, July 1992.

Recommended Standards for Wastewater Facilities, Ten States Standards, 1990.

Design of Wastewater and Stormwater Pumping Stations, Manual of Practice ED-4, Water Environment Federation, 1993.

CHAPTER 2
DRAWING REQUIREMENTS

2.1 Sanitary Sewers

2.1.1 General

Plans submitted to the LFUCG shall include all information necessary to evaluate the proposed design. A comprehensive plan of existing and proposed sewers shall be included for projects involving new sewer systems and/or additions to existing systems.

2.1.2 Geographical Features

All geographical features shall be shown. Topography and elevations of all existing and proposed streets, streams, or water surfaces shall be shown. Contour lines shall be at 2-foot intervals.

The direction of flow in all streams, high and low water elevations of all water surfaces near the sewers shall be shown. 100-year flood elevations shall be shown. The boundaries of the proposed development shall be shown.

2.1.3 Plan and Profile

Plans shall show the location size and direction of all proposed and existing sewers. Plan sheets and profile sheets shall be at a scale no smaller than 1 inch = 50 feet horizontal, and 1 inch = 5 feet vertical.

2.1.4 Manholes

Manhole numbers, manhole stations, deflection angles, and coordinates of manholes shall be shown on the plans.

2.1.5 Lines

The distance between manholes, pipe size, and slope shall be shown on each line segment.

2.1.6 Elevations

Elevations shall conform to the LFUCG datum and be shown at all manhole inverts, tops of manhole and other places as necessary to define the design intent.

2.1.7 Utilities and Easements

The plans shall show all existing utilities and structures, both above and below ground which might interfere with the proposed construction. Easements and locations of all proposed utilities shall be shown on the plans. Refer to 6.9 Easements for additional information.

2.1.8 Miscellaneous

Legends, vicinity map, north arrows, and any other information required for a complete set of sanitary sewer drawings shall be submitted.

2.1.9 Plans Submitted

After submittal to and approval by the State Division of Water one (1) set of the state-approved plans shall be returned to the LFUCG. Record Drawings shall be submitted in accordance with that section of this manual.

2.1.10 Checklists

Checklists to be submitted with the plans are included at the end of Section 2.

2.2 Pumping Stations

2.2.1 General

The LFUCG has developed standard Class C and D pumping station drawings on AutoCAD Release 14 to provide guidelines for the preparation of design plans. These drawings are intended to show the requirements for Class C and D pumping stations and the type of information that is required on the plans. These drawings are not intended to be used in a "cook book" fashion or to minimize the role and/or the responsibility of the Engineer. The Engineer has the ultimate responsibility for the design.

The pumping station shall be designed to meet or exceed the requirements of all Federal, State and Local laws and ordinances, and applicable design standards recommended by the Ten State Standards.

2.2.2 Vicinity Map

Show existing pump stations, force mains, and trunk sewers within a 1-mile radius of the proposed station. Also, indicate the size and minimum grade of the gravity sewer receiving the discharge of the proposed station.

2.2.3 Site Plan

The site plan shall show the following:

- Topographic features and contours
- Location of station relative to existing features and survey base lines as needed
- Existing and proposed utilities
- Existing and proposed property lines and easements
- Bench marks (must tie into LFUCG datum)
- Known high water and/or projected maximum flood elevations (100 year frequency)
- Access road, parking, turn-around, regrade and drainage
- Subsurface information, as appropriate
- Fencing
- Landscaping when required

2.2.4 Detailed Plan Sheets

Provide sufficient plan, section and elevation views to indicate the intent of what is to be furnished.

2.2.5 Elevations

Specific elevations shall be indicated for the following items:

- Vent (above high water and regrade)

- Overflow invert
- Sewer influent invert
- Top of wet well top slab (above regrade)
- Pump start
- Pump stop
- Second pump start
- High water level alarm
- Top of foundation slab
- Regrade
- Top of valve pit

2.2.6 Miscellaneous Plan Details

The following details shall be included on the drawings:

- Manholes and castings
- Pump station and valve covers
- Locking device for wet well and pump station covers shall be hasp and keeper for padlock. Padlock to be furnished by Urban County Government
- Piping connections
- Electrical details, including service pole with weather-tight, lockable, disconnect switches and control boxes
- Pump station and wet well protection - fenced as directed by Division of Water Quality

2.2.7 Specifications and/or Drawings

The following items shall be shown as details on the drawings and/or included in the specifications:

- Lights - Outside on service pole
- Fence - Chain Link, Farm type or other as necessary to match surrounding area
- Paving - Drives and Turnarounds
- Pump Control Panels - For lead/lag duplex pump operation
- Telemetering System - To operate with existing telemetry system
- Spare Parts - Volute gaskets, mechanical seal, impeller, fuses for control power, pump motor if applicable and main disconnect, and spare starter
- O&M Manuals - Require three copies of operation and maintenance manuals and manufacturer's parts list, for all equipment, be furnished to the Division of Water Quality prior to final acceptance
- Painting - Paint piping and appurtenances in the valve vaults and wet wells with coal tar epoxy
- Valves - Valves on each non-submersible pump suction pipe and discharge pipe and check valves on each discharge pipe for both submersible and nonsubmersible systems.

- Pipe - Suction pipe shall not be less than 6” diameter and discharge pipe shall not be less than 4” diameter

2.2.8 Checklists

Checklists to be submitted with the plans are included at the end of Section 2.

Sanitary Sewer Plans Checklist

_____ 1. Plans are stamped by a Licensed Professional Engineer in the Commonwealth of Kentucky
_____ 2. Flow determinations consistent with Section 4 have been made
_____ 3. The receiving system has the capacity for the proposed flows
_____ 4. All geographical features shown
_____ 5. Topography and elevations of all existing features shown
_____ 6. Topography and elevations of all proposed features shown
_____ 7. Contours at 2 ft. Intervals
_____ 8. Direction of flow in streams indicated
_____ 9. 100-year flood elevation shown
_____ 10. Location, size and direction of existing sewers shown
_____ 11. Location, size and direction of proposed sewers shown
_____ 12. Plan and profile sheets at 1" = 50 ft. horizontal and 1" = 5 ft. vertical
_____ 13. Manhole numbers shown
_____ 14. Manhole stations shown
_____ 15. Deflection angles shown
_____ 16. Coordinates of manholes shown
_____ 17. Distance between manholes, pipe size, and slope shown on each line segment
_____ 18. Elevations confirm to LFUCG datum
_____ 19. Elevations shown at manhole inverts and rims
_____ 20. All existing utilities and structures, above and below ground shown
_____ 21. All easements indicated on plans
_____ 22. All utilities are shown in the easements
_____ 23. Easement widths are consistent with Section 6.9.3 Required Easement Widths
_____ 24. Conflicts (main lines or laterals) with the storm sewer or other utilities
_____ 25. Laterals shown for each lot
_____ 26. 6” laterals shown where required
_____ 27. No collector or trunk sewers are located in storm retention basins or their embankments, or the 10-year flood plain
_____ 28. Hydraulic design criteria of Section 6.4 has been followed including velocities and slopes
_____ 29. Manhole design and location is consistent with section 6.5
_____ 30. Pipeline depth is consistent with Section 6.6
_____ 31. Sewer system integrity requirements of Section 6.7 are met
_____ 32. Legends, vicinity map, north arrows etc. shown

Pumping Station Plans Checklist

_____ 1. Plans are stamped by a Licensed Professional Engineer in the Commonwealth of Kentucky
_____ 2. Flow determinations consistent with Section 4 have been made
_____ 3. Class of the pumping station is indicated
_____ 4. Design criteria for the class of pumping station are followed
_____ 5. Wet well sizing is consistent with Section 7.3.1
_____ 6. Force main sizing is consistent with 7.3.3
_____ 7. Other factors such as those listed in 7.3.4 have been considered
_____ 8. Pump rate (gpm) and total dynamic head (TDH) are given
_____ 9. All geographical features shown
_____ 10. Subsurface information, as appropriate, is provided
_____ 11. Topography and elevations of all existing features shown
_____ 12. Topography and elevations of all proposed features shown
_____ 13. Contours at 2 ft. Intervals
_____ 14. Direction of flow in streams indicated
_____ 15. 100-year flood elevation shown
_____ 16. Existing pumping stations, force mains, and trunk sewers within 1 mile radius of the proposed pumping station shown
_____ 17. Size, minimum grade of sewer at discharge point of force main is given
_____ 18. Location, size and direction of existing sewers shown
_____ 19. Location, size and direction of proposed sewers shown
_____ 20. Location, size, and direction of existing force mains shown
_____ 21. Location, size, and direction of proposed force main shown
_____ 22. Manhole numbers shown
_____ 23. Manhole stations shown
_____ 24. Deflection angles shown
_____ 25. Coordinates of manholes and pumping station shown
_____ 26. Distance between manholes, pipe size, and slope shown on each line segment
_____ 27. Bench marks are shown
_____ 28. Elevations confirm to LFUCG datum
_____ 29. Elevations shown at manhole inverts and rims
_____ 30. All existing utilities and structures, above and below ground shown
_____ 31. Property lines for the proposed pumping station property are indicated
_____ 32. All easements indicated on plans
_____ 33. All utilities shown in the easements
_____ 34. Legends, vicinity map, north arrows etc. shown
_____ 35. Access roads, parking, turnarounds are shown
_____ 36. Regrade and drainage are shown
_____ 37. Fencing of the site is shown
_____ 38. Landscaping is shown
_____ 39. Plan and section views sufficient to indicate what is to be built and what equipment is to be furnished
_____ 40. All equipment to be furnished is on the approved equipment list of the LFUCG
_____ 41. Elevations given for all structural and operational points given
_____ 42. Painting is defined and/or specified
_____ 43. Appropriate details for all misc. items
_____ 44. Telemetering system consistent with 7.4.6 or 7.5.6 to operate with existing LFUCG system

CHAPTER 3
CONSTRUCTION PROCEDURES

3.1 Inspection and Construction Services

3.1.1 Construction Inspection Services

In accordance with the requirements of the LFUCG Procedures Manual for Infrastructure Development, construction inspection services shall be provided by the same Engineer that prepared the Improvement Plans.

3.1.2 Construction Inspection Manual

Details of the Construction Inspector duties and responsibilities are defined in the LFUCG Construction Inspection Manual. Information provided in this manual is intended to supplement and add to the information provided in the Construction Inspection Manual and not to replace or delete any requirements of that manual.

3.1.3 Schedule

The Engineer shall keep the Division of Engineering and the Division of Water Quality informed as to the status of the project. The Engineer shall submit copies of the daily field reports to the Division of Engineering. The Engineer shall notify the Division of Engineering and the Division of Water Quality prior to conducting required tests.

3.1.4 Changes

The Division of Engineering and the Division of Water Quality shall be notified of significant changes to the plans and specifications. In addition, the Kentucky Division of Water shall approve such changes.

3.1.5 Shop Drawings

The Engineer shall ascertain that shop drawings are submitted and approved prior to construction or shipment of equipment.

Three copies of approved shop drawings and operating and maintenance instructions for each piece of equipment shall be submitted to the Division of Water Quality, one (1) copy before installation of the equipment, and two (2) copies upon completion of the project. (Refer to Section 3.3 Operating Demonstration hereinafter.) Items to be included are pumps, motors, drive units, compressors, valves, control equipment, electrical panels, sump pumps, fans and all other equipment installed. One laminated copy of the electrical schematic shall be installed in the station's control panel.

3.1.6 Utilities

All utilities required for the construction and initial operation of a pumping station shall be furnished and paid for by the Developer, unless specifically agreed to otherwise in writing by the LFUCG.

“Initial operation” for this purpose shall mean all operation until such time as the LFUCG officially assumes operation of the pump station.

All temporary utility services shall be the responsibility of the Developer.

Obtaining permanent utility services shall also be the responsibility of the Developer. However, the LFUCG shall provide such assistance as necessary to satisfy the utility company that the LFUCG will assume payment of utility bills after completion of initial operations.

3.2 Testing

3.2.1 Developer's Responsibility

All testing required for the acceptance of sewer systems and pumping stations by the LFUCG are the responsibility of the Engineer. The Division of Engineering and the Division of Water Quality shall be notified of all testing 72 hours in advance.

3.2.2 Required Testing for Sanitary Sewers

Testing shall be done in accordance with the Construction Inspection Manual. Required tests for sanitary sewers include:

- Manhole Vacuum Test
- Low-Pressure Air Test
- Deflection Test
- Infiltration/Exfiltration Test (for concrete pipe only)
- TV Survey

The Deflection test shall be conducted after the trench has been backfilled for a minimum of 30 days.

The TV Survey shall be used to confirm the locations of tees for house laterals and may be used to evaluate workmanship and materials.

3.2.3 Required Testing for Pumping Stations

Testing shall be done in accordance with the Construction Inspection Manual. Required tests for pumping stations and force mains include:

- Hydrostatic Pressure Test
- Wet well Vacuum Test
- Drawdown and Pump Test
- Operating Demonstration

3.3 Operating Demonstration

3.3.1 Notification

When the work has been completed and all systems have been tested and are operating in accordance with the specified and/or approved plans and specifications, an operating demonstration shall be held by the Engineer. The following shall be notified in writing at least 72 hours in advance of the operating demonstration:

- Division of Water Quality
- Division of Engineering

3.3.2 Required Personnel for Demonstration

The following persons shall be present for the operating demonstration:

- Developer or his representative
- Engineer
- Contractor
- Equipment supplier service representative
- Representative of the Division of Water Quality and the Division of Engineering

3.3.3 Operating Demonstration Requirements

The operating demonstration shall consist of the following:

- Operating demonstration of all equipment
- Discussion of operation and maintenance procedures, with emphasis on unusual equipment
- Delivery of two additional copies of instruction books and operation and maintenance manuals to the Division of Sanitary Sewer's Representative
- Inventory and receipt for all spare parts furnished with the station
- Correction of all deficiencies noted during the operating demonstration
- Copies of drawdown and pump tests
- Certification by the Engineer of force main pressure test

3.4 Responsibilities to Avoid Damage to the System

3.4.1 Developer

It is the Developer's responsibility to turn over to the LFUCG a complete, undamaged, operable sanitary sewer system, including pumping stations, after all utilities are installed. It is recognized that the Developer does not have total control over other Utility Companies installing other utilities such as water, electric, gas, cable, and telephone, but the Developer shall take the lead role in coordinating and checking the activities of the Utilities and in holding them responsible for any damage to the sanitary sewer system. The Construction Inspector shall be utilized to the extent necessary to protect the sanitary sewer system while other utilities are being installed.

The Developer has a responsibility to notify builders or purchasers of individual lots of the presence and location of any manholes which are located on the lot, that the manholes may not be buried or otherwise covered, and of the Builders responsibilities described in 3.4.2 below. The location and elevation of the stub end of the sewer lateral shall also be shown on the record drawings.

3.4.2 Builder

The Builder has a responsibility to flag and protect the manholes during his construction and re-grading process. Any damage to the manholes during his construction shall be the responsibility of the Builder, and the Builder will pay for all necessary repairs, inspection, and testing.

The Builder has a responsibility to inform the Plumber of the responsibilities described in 3.4.3 below and of the location of the service lateral stub so the Plumber can properly plan his work. The Builder also has a responsibility to inform the property owner of the presence of a manhole on the lot and that the manhole cannot be covered or buried. Manholes will be checked to confirm they have not been covered.

3.4.3 Plumber

The Plumber has a responsibility to locate the service lateral stub prior to beginning his work and to plan the residential or commercial plumbing system such that the existing tees and service lateral stubs can be utilized for connection to the sanitary sewer system. Failure to properly plan the plumbing system or to locate the service lateral stub shall not be a valid reason for tapping the main sewer line.

The Plumber shall install a cleanout at the end of the service lateral consistent with Standard Sanitary Sewer Drawing No. 234. The cleanout shall also serve as the plumbing test tee. The intent is to completely test all installed lines in either the sanitary sewer air test or the plumbing pressure test as well as providing a maintenance access point. The house lateral and the connection to the sewer lateral shall be left uncovered until it is inspected by the Division of Engineering.

3.4.4 Utility Companies

Utility companies shall plan their work and/or that of their subcontractors to avoid damage to the sanitary sewer system. Utility locations to serve new developments shall be planned early in the design process so the Engineer can include the location of all utilities and utility easements in the sanitary sewer plans.

Any damage to the sanitary sewer system caused by the installation of utilities shall be the responsibility of and repairs shall be paid for by the Utility Company that did the damage. Work by subcontractors shall be the responsibility of the Utility Company for which they are working.

Utilities that are installed closer than permitted to the sanitary sewer system shall be required to be relocated at the expense of the offending Utility Company. The Utility Companies shall inspect their work and maintain proper separation from the sanitary sewer.

3.5 Record Drawings

3.5.1 Format for Record Drawings

Record Drawings shall be submitted in the following format:

- Paper format
- Electronic format, AutoCAD Release 14 (or latest version)

3.5.2 Requirements for Record Drawings

Record drawings shall have a title block indicating that the drawings are Record Drawings, the name of the company preparing the Record Drawings, and the date the Record Drawings were prepared. Record Drawings shall be certified correct and complete by the Engineer.

Drawings shall be legibly marked for all construction and underground utilities and include the following:

- Changes of dimension and detail

- Changes made by Requests for Information (RFI), field order, clarification memorandums or by change order

- Details not on original Drawings

- Horizontal and vertical locations of all exposed and underground utilities and appurtenances, both new facilities constructed and those utilities encountered, referenced to permanent surface improvements. This shall include, but not be limited to, all mains, valves, water service locations, sewer lateral locations, manholes, fittings, fire hydrants, piping arrangements, and electrical conduits within the completed facilities.

- Location of and dimensions of roadways and parking areas, providing dimensions to back of curb when present

- Depths of various elements of foundation in relation to finish first floor datum or top of wall

- Location of internal and buried utilities and appurtenances concealed in the construction, referenced to visible and accessible features of the structure

- For sewers, the Record Drawings shall include the horizontal angle and distance between manhole covers.

- For force mains, the profile of the top of the pipe shall be provided. Elevations, not depths, shall be provided at a minimum 100-foot interval and at all bends, high points, low points, air valves, and where elevations are called out on the Drawings.

- Record drawings shall show addresses, data seals, and all construction changes.

3.5.3 Precision for Record Drawings

Precision for the Record Drawings shall be as Follows:

- Record Drawings shall provide horizontal dimensions, distances, and coordinates to the nearest 0.1 foot.

- Record Drawings shall provide elevations to the nearest 0.01 foot for all pertinent items constructed by the Contractor.

- For gravity sewers, the Engineer shall employ a currently Registered Surveyor (in the Commonwealth of Kentucky) to prepare the Record Drawings from a post-construction, field run survey. The Record Drawings shall provide elevations to the nearest 0.01 foot for all manhole inverts, manhole frames, and other pertinent items constructed by the Contractor. The Record Drawings shall provide dimensions, distances, and coordinates to the nearest 0.01 foot and horizontal angles to the nearest 10 seconds.

3.6 System Acceptance by the LFUCG

Prior to the LFUCG accepting any system, including gravity sewer systems, and pumping stations, the following conditions shall be met:

- Satisfactory completion of all required testing
- Satisfactory completion of the operating demonstration for all pumping stations
- Receipt of all required shop drawings, operating information, O & M manuals etc. as defined by this manual
- Receipt and acceptance by the LFUCG of complete, accurate Record Drawings, certified by the Engineer, which represent the actual constructed sanitary sewer system
- Certification of the Engineer that the system was constructed in accordance with the original plans and specifications
- Copies of Releases of Liens for all contractors, subcontractors, engineers, material suppliers, manufacturers etc. who have been involved in the project

CHAPTER 4
FLOW DETERMINATION

4.1 Drainage Area

Sanitary sewers and pumping stations shall be designed to serve the entire drainage area.

Wastewater flows shall be calculated using the best available information for the drainage area. The current proposed development, all known future developments, and allowances for undeveloped land must be included in the flow calculations. The maximum number of units allowed by current zoning shall be used for undeveloped areas.

Allowances for undeveloped land must consider the current zoning of the land, possible future zoning changes, land-use planning documents, location of the land relative to the Urban Services Area boundary, and any other relevant information as well as input from the Division of Planning, Division of Engineering, and Division of Water Quality.

4.2 Flow Calculations

In the absence of data to the contrary, sanitary sewers and pumping station capacity shall be determined by using the information provided in Table 4.1–Wastewater Flows and Table 4.2–Peaking Factors.

TABLE 4. 1 – WASTEWATER FLOWS

Development Type	Design Flow Per Unit	Avg. Flow Rate Per Unit
	gpd	gpm
Single Family	400	0.28
Duplex (2 units)	400	0.28
Condominiums	400	0.28
Private Estates	400	0.28
Townhouses and Apartments	400	0.28
Residential unit	400	0.28
	gpd / acre	gpm / acre
Commercial	2,000	1.39
Industrial	3,600	2.50
Non-developable Land	100	0.07

Calculations shall also be provided showing the capacity of the existing sewer system to receive the projected flows. After obtaining the average flow rate from Table 4.1, a peaking factor shall be applied from Table 4.2 to obtain the design flow rate.

TABLE 4. 2 – PEAKING FACTORS

Average Daily Flow Rate gpd	Average Daily Flow Rate gpm	Tributary Population	Ratio Of Peak Instantaneous Flow Rate To Average Daily Flow Rate
<100,000	<69	<1,000	5.0
100,000-300,000	69-208	1,001-3,000	4.7
300,000-400,000	208-278	3,001-4,000	4.6
400,000-600,000	278-417	4,001-6,000	4.4
600,000-800,000	417-556	6,001-8,000	4.0
800,000-1,000,000	556-694	8,001-10,000	3.8
1,000,000-1,500,000	694-1,042	10,001-15,000	3.6
1,500,000-2,000,000	1,042-1,389	15,001-20,000	3.4
2,000,000-3,000,000	1,389-2,083	20,001-30,000	3.2
3,000,000-4,000,000	2,083-2778	30,001-40,000	3.0
4,000,000-6,000,000	2778-4167	40,001-60,000	2.8
6,000,000-8,000,000	4167-5556	60,001-80,000	2.7
8,000,000-10,000,000	5556-6944	80,001-100,000	2.6
>10,000,000	>6944	>100,000	2.5

4.3 Example Calculation

Assume a 250-acre tract is to be developed and will require a sewage pumping station. In addition, an additional 100 acres lies on the same watershed above the proposed development and is to be considered in the sizing of the pumping station and trunk sewer. Calculations are presented in Table 4.3, Example Calculations.

TABLE 4. 3 – EXAMPLE CALCULATIONS

Development Type	No. Acres	No. Units	Avg. Flowrate Per Unit (gpm)	Avg. Flowrate Per Unit (gpd)	Avg. Flowrate (gpd)	Design Flow Rate (gpd)
Single	150	480	0.28	400	192,000	
Duplex	30	180	0.28	400	72,000	
Condominium	50	300	0.28	400	120,000	
Apartments	20	220	0.28	400	88,000	
Flow rate for Development					472,000	
From Neighborhood Plan Showing Proposed Land Use						
Singles	55	85	0.28	400	34,000	
Estates	45	50	0.28	400	20,000	
Flow rates for Off-site Upstream					54,000	
Avg. Total Flow - gpd					526,000	
Population Equivalent					5,260	
Peaking Factor					4.4	
Design Flow - gpd						2,314,400
Design Flow - gpm						1,607

CHAPTER 5
COMPUTER MODELING

5.1 Computer Modeling

5.1.1 General

The LFUCG is developing an existing sanitary sewer system computer model. Once these models are completed, the LFUCG may require that all additions to the sanitary sewer system be submitted in an electronic format consistent with the adopted model.

If plans and/or other design information are generated using static modeling systems such as AutoCAD or Eagle Point software, that information shall be submitted to the LFUCG in its electronic format.

CHAPTER 6
SANITARY SEWERS

6.1 General

This section contains the criteria necessary to design sanitary sewers. Flow rates shall be determined using the flow information from Section 4.0–Flow Determination.

6.2 Collector Sewers

Collector sewers are primarily installed to receive wastewater directly from property sewer laterals and transport the wastewater to trunk sewers.

Collector sewers are 10 inches or less in diameter.

Collector sewers shall not be located in detention/retention basins or the embankments that create the basin, drainage rights of way, or in the 10-year flood plain.

6.3 Trunk Sewers

A trunk sewer is a principal sewer to which collector sewers are tributary. Trunk sewers shall be designed to handle the drainage area/watershed above them consistent with Section 4.0–Flow Determination.

Trunk Sewers are 12 inches in diameter and greater.

Trunk sewers shall not be located in storm retention basins or the embankments that create the basin, drainage rights of way, or in the 10-year flood plain.

6.4 Hydraulic Design Criteria

6.4.1 Manning's Equation

Use Manning's Equation to determine the proper size and slope to transport the design flow. For design purposes, the roughness coefficient shall be considered 0.013 regardless of the proposed pipe material.

6.4.2 Collector Sewer Criteria

Design collector sewers as follows:

- Design for full flow conditions
- Minimum Velocity - 2 ft./second
- Maximum velocity - 10 ft./second
- Minimum allowable slopes - See Table 6.1 below.

6.4.3 Trunk Sewer Criteria

Design trunk sewers as follows:

- Design for two-thirds (2/3) full condition
- Minimum Velocity - 2ft./second
- Maximum Velocity - 10 ft./second
- Minimum allowable Slopes - See Table 6.1 below.

TABLE 6. 1 – MINIMUM ALLOWABLE SLOPES

Diameter, Inches	Slopes, %	Slopes, ft./ft.
8	0.40	0.004
10	0.28	0.0028
12	0.22	0.0022
15	0.15	0.0015
16	0.14	0.0014
18	0.12	0.0012
21	0.11	0.0011
24	0.08	0.0008

6.5 Manholes

6.5.1 Location

Manholes shall be located at all changes in pipe grade, pipe size, alignment, pipe intersections and at the end of a run of pipe.

6.5.2 Spacing

For pipes 15 inches and smaller, spacing shall not exceed 400 feet, maximum. For pipes larger than 15 inches, spacing shall not exceed 500 feet, maximum.

6.5.3 Size

A minimum 4-foot diameter manhole shall be used for pipes less than 15-inches diameter. Pipes 15 inches to 24 inches in diameter shall utilize a four- (4) or five- (5) foot diameter, depending on the deflection angles. See the Standard Sanitary Sewer Drawing No. 217 for the manhole sizing guide. Pipes larger than 24 inches in diameter to 36 inches in diameter require a five- (5) foot diameter manhole.

6.5.4 Elevations

The elevation of the nearest downstream manhole lid shall be at least one (1) foot below the lowest plumbing fixture in a structure. The intent is to eliminate the possibility of a clogged or overloaded sewer backing up into a structure, damaging the structure or its contents, or creating a health hazard for the occupants.

The elevation of manhole lids shall be at least one (1) foot above the 100-year flood elevation.

Manholes and sanitary sewer pipes shall not be located in storm retention basins or the embankment creating the basin, or the 10-year flood plain.

6.5.5 Manhole Frames and Covers

Manhole frames and covers shall be consistent with Standard Sanitary Sewer Drawing No. 220. Adjustable frames and covers shall be consistent with Standard Sanitary Sewer Drawing No. 221. Watertight frames and covers shall be consistent with Standard Sanitary Sewer Drawing No. 222.

6.5.6 Manhole Bench

Benches in manholes shall be one pipe diameter for pipes greater than 10 inches and one-half pipe diameter for pipes 10 inches or less. The bench shall slope upward from the flow channel to the walls of the manhole, per LFUCG Standard Drawing #213. All inlets shall have a flow channel.

6.5.7 Existing Brick Manholes

There shall be no new connections to existing brick manholes. Where connections are necessary to an existing brick manhole, the brick manhole shall be replaced with a new manhole that meets the specifications of the LFUCG standard drawings.

6.6 Pipeline Depth

Sewers shall be designed to meet the following depth requirements:

- Minimum four feet of cover, unless sewer is constructed with ductile iron pipe, whereby the minimum cover shall be two and a half (2.5) feet.

- Top of the pipe shall be two and a half (2.5) feet below a stream, creek, or ditch when it is crossed.

- Such a depth to allow proper connections of service laterals from the probable structure location.

Reference is made to Standard Sanitary Sewer Drawing No. 204 that provides details of acceptable fill depths for various pipe materials.

6.7 Sewer System Integrity

In locations where the sanitary sewer may be exposed to non-routine installation conditions, the sewer shall be constructed using ductile iron pipe. These conditions include, but are not limited to:

- Where depth of cover is less than four (4) feet
- Where depth of cover is greater than allowed by Standard Sanitary Sewer Drawing No. 204.
- Where the sewer crosses under a creek or stream.
- Where ductile iron pipe is used, it shall extend from manhole to manhole.
- Where the sewer is constructed of ductile iron pipe, the sanitary sewer service lateral from the main to the property line or easement line shall be ductile iron.

Where the sewer crosses over a storm drain pipe, PVC pipe is allowed, but the sewer joints shall be equidistant from the storm sewer trench.

The Engineer shall contact the Division of Engineering to determine the protection measures necessary when a sanitary sewer is proposed to cross under a new or existing storm drain pipe if the outside wall of the storm drain pipe will be within 18 inches vertically of the outside wall of the sanitary sewer.

The Engineer shall contact the Kentucky Division of Water to determine the protection measures necessary when a sanitary sewer is proposed to cross over or under an existing water main if the outside wall of the water main will be within 18 inches vertically of the outside wall of the sanitary sewer.

6.8 Other Requirements

6.8.1 Service Laterals

Service laterals to single family houses shall be four (4) inch diameter from a four (4) inch tee. Service laterals longer than five (5) feet in length shall be six (6) inches in diameter. Service laterals from the main to the property line or easement line shall be of the same material as the main. If two (2) or more residential units are connected to a common lateral, the line and tee shall be six (6) inch diameter. For commercial or multi- family connections the lateral shall be sized based on the number of units but in no case less than six (6) inches in diameter. Service laterals shall not be located in storm retention basins or the embankments that create the basin.

Six inch diameter laterals serving single family residential units shall be constructed with a cleanout at the end of the lateral where it enters the lot. These laterals shall be shown on the record drawings and shall be subject to the sewer testing requirements in Section 3.2.

The Engineer shall contact the Division of Engineering when a service lateral is to be connected to a manhole. All service laterals connecting to manholes (when approved) shall have a flow channel.

The Developer shall be responsible for installation of necessary additional laterals within the three-year warranty period. Any installation of laterals that were not shown on the Improvement Plans accepted by LFUCG shall meet new construction specifications. This includes installation of only rigid factory tees (no saddles shall be allowed.)

6.8.2 Water Main Separation

Sewers shall be laid at least ten (10) feet horizontally from existing or proposed water lines. The distance shall be measured edge of pipe to edge of pipe.

Sewers crossing water mains shall be laid to provide a vertical distance of 18 inches between the outside of the water main and the outside of the sewer. This shall be the case where the water main is either above or below the sewer. The crossing shall be arranged so that the sewer joints will be equidistant and as far as possible from the water main joints. Where a water main crosses under a sewer, adequate structural support shall be provided for the sewer to prevent damage to the water main.

6.8.3 Sewer in Fill Areas

Subgrade and backfill for sewers located in fill areas shall be compacted to not less than 95 percent of density determined from the Standard Proctor Test, or to not less than 90 percent of the density determined by the Modified AASHTO Method (AASHTO T-99).

6.9 Easements

6.9.1 General

Easements are often shared for the installation of several different utilities. Sanitary sewers, storm sewers, underground or overhead electric, cable television, and telephone are often in the same utility easement competing for space. With this being the case, it is extremely important that the easements and the utilities to be located in the easement be defined as early as possible in the design process. This information shall be included in the plans submittal to the Division of Engineering.

Sanitary sewers and storm sewers in the same easement shall be a minimum of four (4) feet off the property line, located on opposite sides of the property line, and not closer than two (2) feet from the outside edges of the easement. Underground electric service shall be separated from them by a minimum of six (6) feet. Sanitary sewers and storm sewers shall be spread further apart to allow underground electric to run between the two and the easement may be off-center relative to the property line to allow a good distribution of the various utilities in the easement. No other utilities may share the same trench with the sanitary or storm sewers and if any other utility is installed in error in the same trench, it shall be moved. No reason, including efforts to avoid rock, will be considered valid for not relocating utilities installed over the sanitary or storm sewer.

6.9.2 Variances and Encroachments

No structure shall be permitted in, on, over, or under the land within the easement. Developers and their Engineer shall plan the utilities, easements, property lines, and other features of the development so that homeowner improvements will not encroach on the easement. At-grade patios (without footings), slabs on grade (without footings), sidewalks, driveways, and permitted privacy fences with non-structural posts (no brick or masonry columns) are permitted in the easement.

6.9.3 Required Easement Widths

The required width of an easement varies based on the utilities that will be located in the easement. Table 6.2 addresses the required easement width.

TABLE 6. 2 – EASEMENT WIDTHS

Utilities in Easement	Width Required -ft. (min.)
Sanitary Sewer < 10 ft. deep	15
Sanitary Sewer > 10 ft. deep	20
Sanitary Sewer < 10 ft. deep & Storm or U.G. Electric (only 1)	15
Sanitary Sewer (any depth) & Storm & U.G. Electric	20
Force Mains (alone)	12
Force Mains-with any other single utility	15
Force Mains-with multiple other utilities	20 Additional width may be required if all utilities occupy same easement
Overhead Electric, Cable TV, Telephone, Street Light, or other small size utilities	May be included in any easement without additional width, but may not occupy same trench as sewers. Electric poles must be set to avoid all other utilities

CHAPTER 7
PUMPING STATIONS

7.1 Administrative Procedures

7.1.1 General

The use of a pumping station shall be considered only when the area cannot be served by gravity sewers, including reasonable extensions to existing or proposed gravity lines. Multiple small pumping stations in lieu of a larger single pumping station shall not be permitted. At such time that an Engineer/Developer becomes aware of the need for a sewage pumping station, he shall immediately advise the Division of Engineering and the Division of Water Quality and arrange for a meeting with them. Prior to the meeting, the Engineer/Developer shall review article F. INTERIM FACILITIES, and ALLOCATION OF SYSTEM CAPACITY, pages II-6 through II-12 of the LFUCG adopted IMPLEMENTATION PLAN FOR CONSTRUCTION OF THE OUTER PERIMETER SEWERAGE SYSTEM - 1986, and any subsequent amendments to these documents or the 201 Facilities Plan. The Engineer/Developer shall provide the following information for discussion and consideration at the meeting:

- General location and elevation of proposed pumping station and 100 year flood.
- Approximate capacity in gallons per minute.
- Probable points of discharge to existing or proposed systems.
- Area of proposed service.
- Development and construction schedule.
- Relationship of proposed system to existing and/or other proposed systems and capability of existing system to serve proposed areas.
- Future tie-in by others with a reimbursement schedule.
- Proposed rights of way, easements, etc. for roads, turnarounds, and utilities.

This initial meeting shall result in a decision by the Commissioner of the Department of Public Works/Development and the Commissioner of the Department of Environmental Quality that the proposed pumping station is premature or appropriate according to the implementation plan or that the proposed development can be served by existing or other proposed facilities without the necessity of an additional pumping station.

7.1.2 Design of Pumping Station

Design shall be in accordance with this manual and all other applicable rules and regulations. Design drawings and specifications shall be stamped by a Professional Engineer licensed by the Commonwealth of Kentucky.

7.1.3 Design Approval Process

Upon completion of the design of the pumping station, the following shall apply

- An initial submittal of three (3) sets of final plans and specifications for the proposed pumping station shall be submitted to the Division of Engineering and the Division of Water Quality. After review and acceptance by the Division of Engineering and the Division of Water Quality, the Engineer shall submit the plans to the Kentucky Department of Environmental Protection for approval.

- Along with the submittal to the Kentucky Department for Environmental Protection for approval of plans and specifications, a request should be made for a required permit from the Kentucky Department for Environmental Protection.

7.2 Classes of Pumping Stations

Sanitary sewage pumping stations shall be divided into four (4) classes based on the pumping capacity. They are:

Class A - 3,000 gpm and greater
Class B - 1,000 gpm to 2,999 gpm
Class C - 75 gpm to 999 gpm
Class D - less than 75 gpm

7.2.1 General Requirements – Class A and Class B Pumping Stations

Class A and B pumping stations shall be designed to pump the ultimate design capacity of the drainage area. Class A and B pumping stations may be submersible or dry-pit pumping stations. Class A and B pumping stations shall have the following components:

- Building
- 1-inch open, mechanically cleaned bar screen if influent sewer is 30" diameter or larger
- Flow measurement and recording
- Odor Control
- Emergency Power Generator
- Telemetry/SCADA System
- Concrete, cast in-place wet well
- Minimum of three (3) pumps and pumping compartments
- Fencing as required
- Landscaping as required
- Access Roads and Turnarounds

Class A and B pumping stations generally will be planned, designed, and constructed by contract with the LFUCG. Class B pumping stations may be planned, designed, and constructed by a Developer. Additional information on the required components is provided in Section 7.4 Details of Class A and B Pumping Stations.

7.2.2 General Requirements – Class C and Class D Pumping Stations

Requirements for Class C and D pumping stations are very similar to each other and considerably different from Class A and B pumping stations. Class C and D pumping stations shall have the following components:

- Emergency Power Portable Hookup
- Telemetry System
- Precast Concrete Components
- Minimum of two (2) submersible pumps required, and tin can type buried pumping stations not permitted. Multiple wet wells are required for Class C, a single wet well for Class D

- Fencing
- Landscaping as required
- Access Roads and Turnarounds
- Odor control, if necessary

7.2.3 Pumping Stations Permanent

All pumping stations are considered permanent and shall be designed to these standards.

7.2.4 Pumping Station Class Requirements

Table 7.1 summarizes the various requirements of Class A, B, C, and D pumping stations.

TABLE 7. 1 - REQUIREMENTS FOR PUMPING STATIONS

Components	**Class A P.S. 3,000 & > gpm**	**Class B P.S. 1,000-2,999 gpm**	**Class C P.S. 75-999 gpm**	**Class D P.S. <75 gpm**
Building - 3 Room Min. & B.R.	Yes	No	No	No
Building - 2 Room Min.	No	Yes	No	No
Bar Screen	Yes (1)	Yes (1)	No	No
Flow Measurement	Yes	Yes	No	No
Odor Control	Yes	Yes	Possible	Possible
Emergency Power Generator	Yes	Yes	No	No
Emer. Power Portable Hookup	No	No	Yes	Yes
3 Phase Electrical Power Required	Yes	Yes	Yes	Yes
Telemetry	Yes	Yes	Yes	Yes
Cast in Place Concrete Required	Yes	Yes	No	No
Precast Concrete Allowed	No	No	Yes	Yes
Submersible Pumps Allowed	Yes	Yes	Yes	Yes
Dry Pit Pumps Allowed	Yes	Yes	No	No
3 Pumps Minimum	Yes	Yes	No	No
Multiple Wet wells Required	Yes	Yes	Yes	No
Fence	Yes	Yes	Yes	Yes
Paved Access & Turnarounds	Yes	Yes	Yes	Yes

(1) Required if influent sewer is 30” in diameter or larger.

7.3 Hydraulic Design Criteria

7.3.1 Wet Well Sizing

Class A, B, and C pumping stations utilize the double wet well arrangement. Class D pumping stations utilize a single wet well. Wet wells should be sized such that the electric motors will not start more than once every ten (10) minutes, assuming only one (1) pump is operating. The Engineer shall provide manufacturer's pump and motor data to document the permissible number of motor starts.

The critical flow rate is when the inflow to the pumping station wet well is exactly one half (1/2) of the sewage pump capacity. The formula for determining the minimum operating volume of the wet well is as follows:

Cycle Time = Time to Fill + Time to Draw Down

Time to Fill = Volume/Influent Rate

Time to Draw Down = Volume(Pump Rate - Influent Rate)

Cycle time is shortest when:

Influent Flow Rate = ½ Pump Rate

$$\text{Cycle Time} = \frac{\text{Volume}}{\text{½ Pump Rate}} + \frac{\text{Volume}}{\text{Pump Rate - ½ Pump Rate}}$$

$$\text{Cycle Time} = \frac{\text{Volume}}{\text{½ Pump Rate}} + \frac{\text{Volume}}{\text{½ Pump Rate}}$$

$$\text{Cycle Time} = \frac{\text{Volume (4)}}{\text{Pump Rate}}$$

Rearranging the formula gives the required wet well volume

$$\text{Volume} = \frac{\text{(Cycle Time) (Pump Rate)}}{4}$$

or for a 10 minute cycle time

Volume (gal) = 2.5 Pump Rate (gpm)

7.3.2 Example

If the pumping rate is 400 gpm, the critical flow rate for sizing the wet well is 200 gpm.

Wet well Volume = 2.5 (400 gpm)

Wet well Volume = 1,000 gallons

7.3.3 Force Main Sizing

The Kentucky Department for Environmental Protection, Division of Water, generally requires that a force main shall be sized to maintain velocity of 2 feet per second in the force main.

Table 7.2 provides the minimum flow rates necessary to maintain a minimum velocity of 2 feet per second.

TABLE 7. 2 – FORCE MAIN SIZING

Pipe Diameter Inches	Min. Flow Rate gpm
4	75
6	180
8	325
10	500
12	700
14	1,000
16	1,250
18	1,600
20	2,000
24	2,850
30	4,500

The minimum allowable size force main is 4 inches in diameter.

Upper limits on velocities in sewage force main will generally be controlled by head loss concentrations; however, a velocity of 5 feet per second shall not be exceeded.

The C factors used for design of force mains are:

- PVC C = 140
  Check at C = 120 and 160

- Cement lined Ductile Iron C = 100
  Check at C = 90 and 140

7.3.4 Factors Affecting Pump Selection

Other factors shall be considered in the design of pumping stations and their components. These factors include:

- Use of variable frequency drives (VFD's) with the pumps. VFD use may affect wet well and pump sizing.
- Effects of one (1) or two (2) pumps operating. When the force main is close to a larger size being required very little, if any, additional capacity can be obtained from operating two (2) pumps at once. Selection of the larger size force main may permit the second operating pump to add to the station capacity at peak flow periods. This should not be considered if the minimum velocity with one (1) pump operating will be less than 2 feet per second.
- Effects on the operation of the pumping station if the total dynamic head, TDH; friction head, Hf; static head, Hs; or C factor differs from the design values.
- Selection of pumps, motors, and impeller such that a larger impeller may be added to the pump to increase capacity without a required motor change.

Consideration of these factors is not meant to imply that all possible variables can be handled or designed into every system, but only that the Engineer should evaluate all factors so the resulting selections are the best possible under the design conditions.

7.4 Class A and B Pumping Station Details

7.4.1 Class A and Class B Buildings

Buildings shall have separate rooms for the electrical equipment including pump control panel and telemetry panel, bar screen, and odor control equipment (Class B odor control equipment may be outside). Class A buildings shall include a restroom. Standby power generators may be located in a separate room in the building or may be housed in a manufacturer's pad-mounted, outdoor generator enclosure. The electrical room shall be air conditioned for equipment cooling. All rooms shall have appropriate forced ventilation and humidity control. The building shall be constructed such that it is architecturally compatible with the surrounding area, including house/buildings.

7.4.2 Class A and Class B Bar Screen

A bar screen is required if the influent sewer is 30" diameter or larger. The bar screen shall be housed in a separate room in the building. The bar screen shall be mechanically cleaned with ¾-inch openings. Controls shall be located in the electrical room and housed in Nema 4 control panel and operate based on a variable timer or channel flow level sensor. Auxiliary contacts shall be provided so the screen can be monitored by the telemetry system. All equipment in this room shall be explosion proof in accordance with NFPA 820.

7.4.3 Class A and Class B Flow Measurement

Sewage flow shall be measured using a Parshall flume and recorded utilizing a circular chart recorder located in the electrical room of the building. Auxiliary contacts shall be provided so the flow can be monitored by the telemetry system. When excessive depth is involved, an ultrasonic (doppler) flow meter or a magmeter may be used on the effluent force main.

7.4.4 Class A and Class B Odor Control

Required odor control measures will vary depending on the installation and its location. Consideration should be given to systems for the local odors, such as sodium hypochlorite systems, as well as force main discharge manhole odors that may require a Bioxide system.

7.4.5 Class A and Class B Emergency Power

Full emergency power generation equipment shall be provided. This equipment may be housed in a separate room in the building or in a manufacturer's pad-mounted, outdoor generator enclosure. Consideration shall be given to the noise levels in the surrounding areas. Fuel tanks for Class A stations shall be separate from the enclosure, Class B fuel tanks may be integral to the generator enclosure. Fuel tanks shall be sized to permit approximately 24 hours of run time.

7.4.6 Class A and Class B Telemetry System

Class A and B sewage pumping stations shall be provided with telemetry equipment sensors compatible with LFUCG's provided telemetry system. The system is a Motorola INTRAC 2000 microprocessor-based system, with a repeater station and computer-based master station. The system utilizes a radio communication system with pumping station radios transmitting on 808.63750 MHz and receiving on 853.63750 MHz.

Table 7.3 provides the signals required to be monitored at each pumping station.

TABLE 7. 3 – CLASS A & B TELEMETRY REQUIREMENTS

Monitoring Point	Submersible Pumping Station		Dry Pit Pumping Station	
	Monitor	Required Signals	Monitor	Required Signals
Pump Run for Each Pump	Yes	3 min.	Yes	3 min.
Power Failure	Yes	1	Yes	1
Generator Run	Yes	1	Yes	1
High Wet well	Yes	1	Yes	1
Telemetry Fail	Yes	0	Yes	0
Water on the Floor	No	0	Yes	1
Building Intrusion	Yes	1	Yes	1
Telemetry Panel & Control Panel Intrusion	No	0	No	0
Combustible Gas Detection	Yes	1	Yes	1
Overflow	Yes	1	Yes	1

These status signals shall be monitored as described below.

- Pump run shall be monitored utilizing an auxiliary contact from the pump motor starter.

- Power failure shall be monitored using a three-phase power monitor. The power monitor shall provide a closed contact output upon detecting a power failure and shall be TIME MARK model 258 or 260 (single-phase) or equal.

- Generator run shall be monitored off an auxiliary contact in the generator control panel.

- High wet well level shall be monitored utilizing a mercury float switch mounted in the wet well. The float shall be mounted at an elevation to provide a closed contact output when the wet well water level is approximately 1 foot below the overflow. The actual float elevation shall be field-determined by the LFUCG. The float cable shall be of

sufficient length to terminate wiring in the control panel without splicing. The float switch shall be Consolidated Electric Model LS or equal.

- Telemetry failure is internal to the communication equipment and shall be monitored at the master station.

- Water on the floor shall be detected utilizing a bracket-mounted float switch mounted on the wall just above the floor. The switch shall provide a closed-contact output, if water on the floor raises the float switch. The float switch shall be DELAVAL GEMS LS-270, or equal.

- Building intrusion shall be monitored by a limit switch mounted on the interior door frame that provides a closed contact when the building door(s) is open.

- Combustible gas shall be monitored by a contact in the combustible gas detection system panel.

- Overflow shall be by a float switch in the same manner as the high wet well level.

The radio communications equipment and the monitor/control unit shall be housed in a NEMA 4 enclosure suitable for outdoor use. The telemetry system shall be provided by LFUCG, complete with antenna, coaxial cable, conduit, wire, and miscellaneous appurtenances necessary to provide a complete, functioning system.

The telemetry master station shall be modified, as necessary, by the LFUCG to add the proposed pumping station to the monitor system.

All necessary FCC licensing shall be obtained by the LFUCG for additional sites.

7.4.7 Class A and Class B Wet Wells

Wet wells, flow measurement channels and Parshall flume (with fiberglass insert), building foundation, and other structural components of Class A and B pumping station shall be cast-in-place concrete. Precast concrete components are not acceptable. Concrete flow channels and aluminum gates shall direct the sewage flow to the wet wells. Piping and valves are not acceptable.

All hardware in the wet wells including but not limited to guide rails, anchor bolts, chains, cables, mounting brackets, hinges, hinge pins, and other hardware on aluminum hatches, etc. shall be stainless steel or other approved non-corrosive material. Galvanized or coated steel is not acceptable.

Combustible gas monitoring equipment shall be mounted in a location convenient for maintenance purposes and consistent with the manufacturer's recommendations.

7.4.8 Class A and Class B Pumps

A minimum of three (3) pumps is required. Two (2) pumps shall be capable of pumping the design flow, and the third pump shall be standby. Depending on the size of the pumps compared to the ultimate pumping station capacity, additional pumps may be required. In a submersible pumping station with three (3) pumps, each pump shall be located in an individual wet well. Four (4) pumps may be located with two (2) in each wet well.

Controls for the pumps shall utilize an ultrasonic level control system.

7.4.9 Class A and Class B Fencing

Fencing is required for Class A and B pumping stations. Depending on the location of the pumping station, the surrounding area, potential for damage to outside equipment, and other factors, the Division of Water Quality may waive this requirement or allow a residential treated wood fence around selected outdoor components and equipment but not the entire site.

7.4.10 Class A and Class B Landscaping

Landscaping may be required based on the surrounding area.

7.4.11 Class A and Class B Access Roads and Turnarounds

Access roads and turnarounds shall be constructed of asphalt. Appropriate drainage, consisting of ditches, cross-drains, headwalls, catch basins, and the like shall be included in the design. Access roads and turnarounds shall be consistent with Standard Sanitary Sewer Drawing No. PS 413-0.

7.4.12 Class A and Class B Buffer Zones

The pump station structure shall be located a minimum of 300 feet from an existing or future residential structure.

7.5 Class C and D Pumping Station Details

7.5.1 Class C and Class D Building

A building is not required.

7.5.2 Class C and Class D Bar Screen

A bar screen is not required.

7.5.3 Class C and Class D Flow Measurement

Flow measurement and recording is not required.

7.5.4 Class C and Class D Odor Control

Odor Control provisions shall be required if the Division of Water Quality determines that odors will be a problem.

7.5.5 Class C and Class D Emergency Power

Emergency power generation equipment is not required. Provisions shall be made to allow a portable, trailer-mounted generator to be parked at the site and plugged in to power the pumping station.

Required components include:

- Manual switch to disconnect from utility power supply and Receptacle to plug in the portable generator.

- Receptacle shall be in accordance with the latest Division of Water Quality standard for the class pumping station and the total horsepower to be installed

7.5.6 Class C and Class D Telemetry

Telemetry system requirements are generally the same as Class A and B pumping stations with the exception that building intrusion signals are not necessary, since a building will not normally be a component of a Class C or D pumping station. Table 7.4 summarizes the telemetry requirements for Class C and D pumping stations.

TABLE 7. 4 – CLASS C & D TELEMETRY REQUIREMENTS

Monitoring Point	Submersible Pumping Station	
	Monitor	Required Signals
Pump Run for Each Pump	Yes	2
Power Failure	Yes	1
Generator Run	No	0
High Wet well	Yes	1
Telemetry Fail	Yes	0
Telemetry Panel & Control Panel Intrusion	Yes	1
Combustible Gas Detection	Yes	1
Overflow	Yes	1

7.5.7 Class C and Class D Wet Wells

Wet wells for Class C and D, pumping stations may utilize precast concrete pipe/manhole sections. Class C pumping stations must have a minimum of two (2) wet wells. Class D pumping stations may have a single wet well. Piping and valves are acceptable to direct sewage flow to the wet wells.

All hardware in the wet wells including but not limited to guide rails, anchor bolts, mounting brackets, hinges, hinge pins, and other hardware on aluminum hatches, etc. shall be stainless steel or other approved non-corrosive material. Galvanized or coated steel is not acceptable.

Combustible gas monitoring equipment shall be mounted in a location convenient for maintenance purposes and consistent with the manufacturer's recommendations.

7.5.8 Class C and Class D Pumps

A minimum of two (2) pumps is required for Class C and D pumping stations. One (1) pump shall be capable of pumping the design capacity, and one (1) pump will be standby.

7.5.9 Class C and Class D Control Enclosure

The control enclosure shall be aluminum or stainless steel and shall include a hasp for a padlock.

7.5.10 Class C and Class D Fencing

Fencing requirements are the same as Class A and B pumping stations.

7.5.11 Class C and Class D Landscaping

Landscaping requirements are the same as Class A and B pumping stations.

7.5.12 Class C and Class D Access Roads and Turnarounds

Access road requirements are the same as Class A and B pumping stations. Common driveways with adjacent property owners will not be allowed.

7.6 Force Main Details

7.6.1 Force Main Blocking

Refer to Drawing Number PS 406-0. All fittings along the route of the force main shall be blocked or restrained as shown on the detail sheets to prevent joint separation during operation.

7.6.2 Force Main Air Releases

Refer to Drawing Numbers PS 415-0 and 417-0. Automatic air releases should be installed on all major high points along the route of the force mains and manual air releases placed on the minor or sub-high points. These shall be shown on Record Drawings with accurate measurements for location.

7.6.3 Force Main Markers

Refer to Drawing Numbers PS 408-0 and PS 409-0. Force mains shall be sufficiently marked by concrete and/or steel markers to adequately locate the main for future reference. Markers shall be placed at every change of direction, street crossings, at an allowable sight distance (in fields or undeveloped areas), and Northing and Easting coordinates shown on the Record Drawings. Magnetic tape located above the force main is required for locating non-metallic force mains.

7.6.4 Force Main Discharge Point

Refer to Drawing Number PS 407-0. The discharge point of a force main (particularly long and/or large force mains) should be checked to determine if problems might arise from the discharge of septic sewage. Hydrogen sulfide (sewer gas) will be generated inside the force main and will be expelled at the discharge point.

If this appears to be a consideration, special treatment should be given to the design of the receiving manhole. Items such as underground venting, submerging the discharge, and preventing turbulence will help to prevent a nuisance at the discharge point.

The receiving manhole shall be epoxy coated on all inside surfaces to protect against corrosion.

In some situations, it may be necessary to aerate, chlorinate, use hydrogen peroxide, or provide other means to prevent or minimize the formation of the hydrogen sulfide gas.

7.6.5 Force Main Materials

PVC (SDR 21 minimum wall thickness), and ductile iron (Class 50 minimum) pipe shall be allowed for use in force main construction, dependent on specific conditions.

7.6.6 Force Main Isolation Valves

Where force mains tie into existing force mains, a gate valve shall be provided in the new force main at a point near the connection to the existing force main. The valve is to provide a means of isolating the force main in the case of a force main break.

7.7 Use of Approved Equipment

All equipment in all pumping stations must be on the approved equipment list maintained by the LFUCG Division of Water Quality.

APPENDIX A – CHECKLISTS

Pumping Station Checklist

Station Name _____

Station Type _____

Location _____

Job Number _____

Engineer _____

_____ Flow Determination

_____ O & M Cost Projections

_____ Design Elevations

_____ Head Calculations

_____ Head & Performance Curves

_____ Operating Conditions

_____ Force Main Diameter Verifications (Economy)

_____ Project Map (Location)

_____ Site Plan

_____ X-Section & Detail Sheet

_____ Specifications

_____ Hydraulic Gradient – Include in Submittal to Urban County Government

Head Curves
Design Form

Sheet _____

Project _____ Date _____

Station _____ Job No. _____

By _____

Design Capacity _____

Design Static _____

Force Main Length _____

Force Main Size (Ø) _____

"C" Factor for Design _____

System Head Curve – Design - : Ø = _____ c = _____

Rate	H Factor	Length/100	c =	Hf	Design Static	TDH

System Head Curve – Minimum Head, Maximum Discharge – Ø = _____ c = _____

Rate	H Factor	Length/100	c =	Hf	Minimum Static	TDH

Installation Type (check one)

SIMPLEX DUPLEX TRIPLEX

Station Type (check one)

SUBMERSIBLE SUCTION LIFT

HORIZONTAL DRY PIT VERTICAL DRY PIT

OTHER (Describe) _____

Operating Conditions

Item	Location
Design Capacity	_____ GPM
Design TDH:	_____ Ft.
Design Static Head:	_____ Ft.
Force Main Length	_____ Ft.
Force Main Size	_____ In. o
Design "C" Factor:	_____
Min. Static Head:	_____ Ft.
Min. TDH (C = 160):	_____ Ft.
Max. Capacity @ Min. TDH:	_____ GPM

Pump

Design Efficiency	_____ %
Min. Solid Diameter	_____ In. o
Suction Size (Min.)	_____ In. o
Discharge Size (Min.)	_____ In. o

PUMP STATION TELEMETRY SYSTEM
FCC License Information

Physical Location of Station (verbal description)

_____
_____
_____
_____
_____
_____

Longitude: _____
Latitude: _____
Ground Elevation: _____

Street Address of Station (if applicable)

_____
_____

Additional Information

_____
_____
_____
_____
_____

APPENDIX B – DRAWINGS

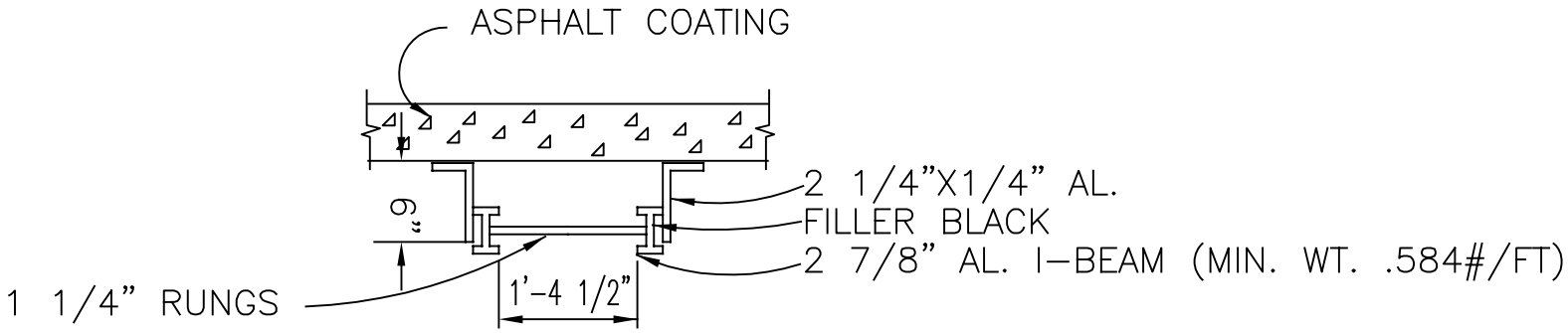

PLAN

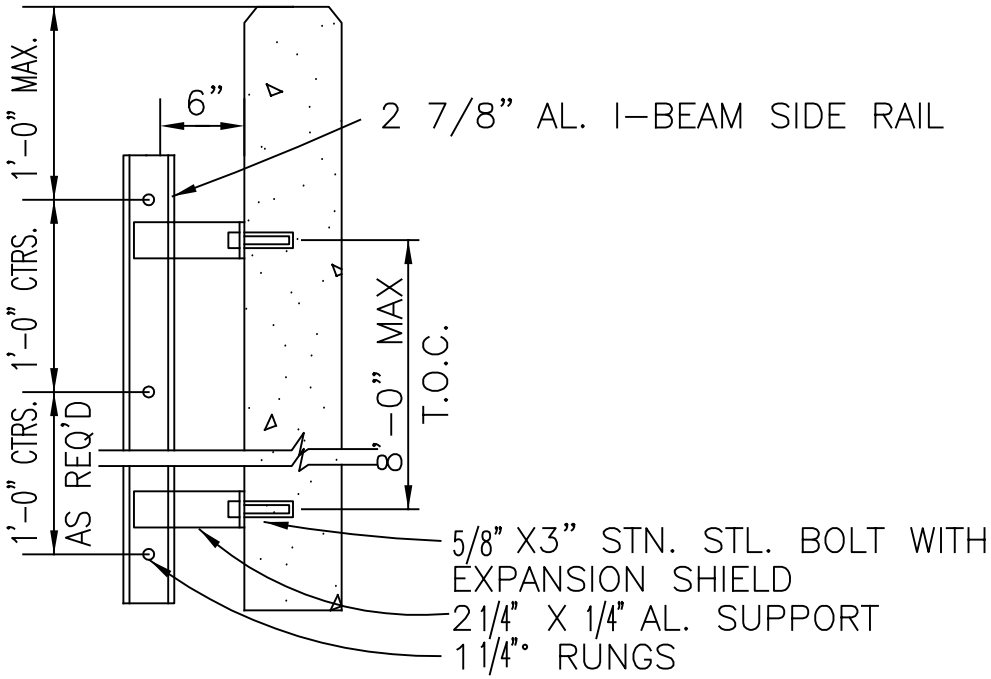

DETAIL

ALUMINUM LADDER
PLAN AND DETAIL

1/1/09

STANDARD SANITARY SEWER DRAWING NO.

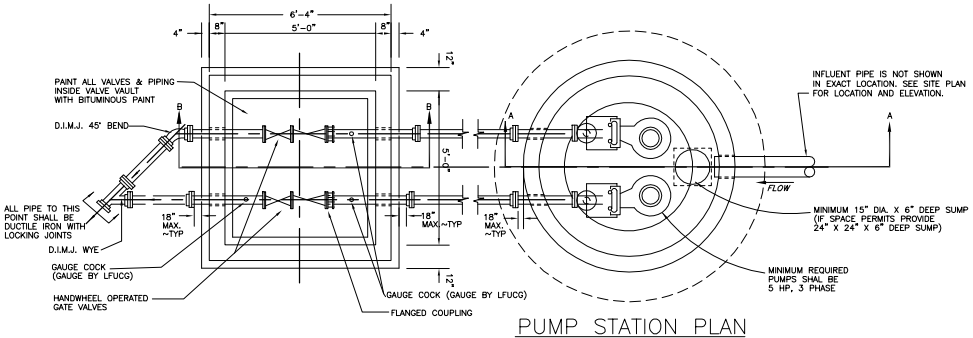

VALVE VAULT PLAN

NOT TO SCALE

PUMP STATION PLAN

NOT TO SCALE

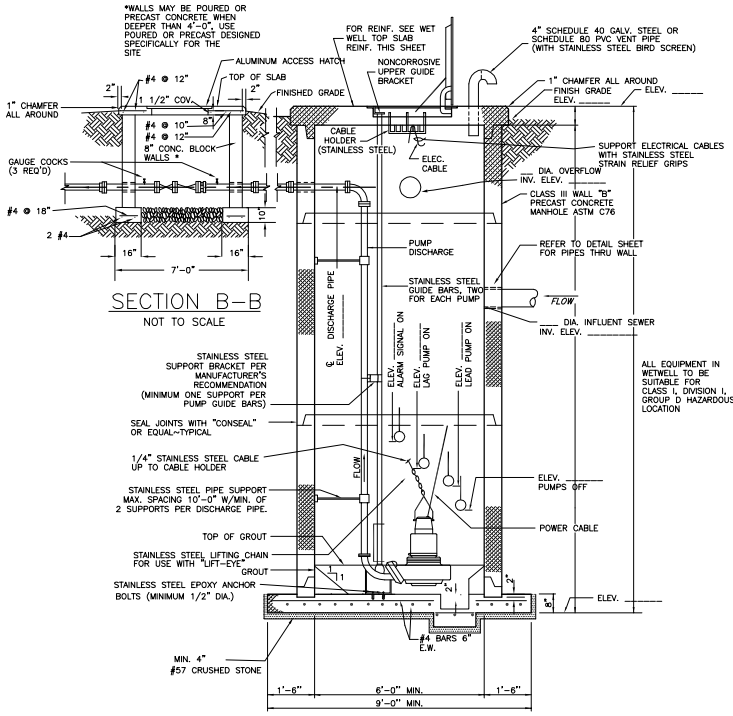

SECTION B–B

NOT TO SCALE

SECTION A–A

NOT TO SCALE

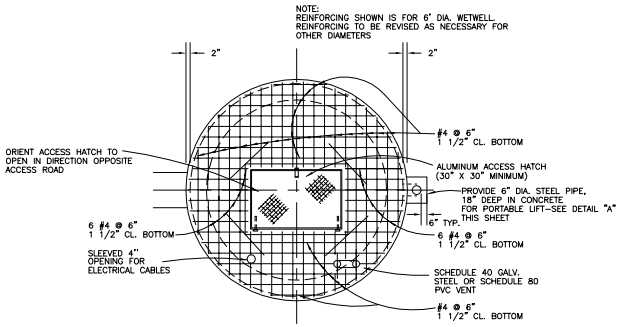

WET WELL TOP SLAB REINFORCING

NOT TO SCALE

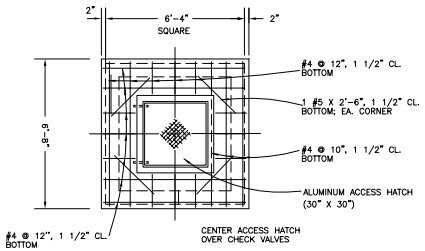

VALVE VAULT TOP SLAB REINFORCING

NOT TO SCALE

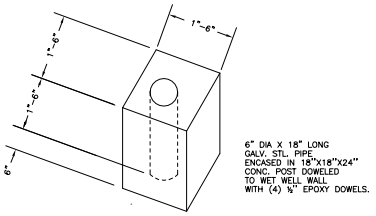

DETAIL "A"

NOT TO SCALE

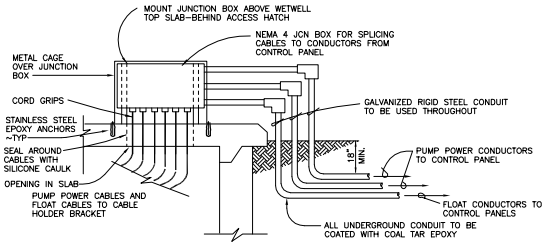

WETWELL ELECTRICAL CABLE ENTRY DETAIL

NOT TO SCALE

THIS DRAWING IS PROVIDED BY THE LFUCG FOR INFORMATIONAL PURPOSES ONLY, AS A SAMPLE OF DRAWING REQUIREMENTS. SUBMITAL DRAWINGS ARE THE TOTAL RESPONSIBILITY OF THE DESIGN ENGINEER AND SHALL BE PREPARED AND STAMPED BY AN ENGINEER LICENSED TO PRACTICE IN THE COMMONWEALTH OF KENTUCKY.

CLASS D
SINGLE WETWELL
SUBMERSIBLE PUMP STATION

(ONLY FOR PUMP STATIONS LESS THAN 75 GPM)

1/1/09

STANDARD SANITARY SEWER DRAWING NO. PS400–0

LEXINGTON – FAYETTE URBAN COUNTY GOVERNMENT

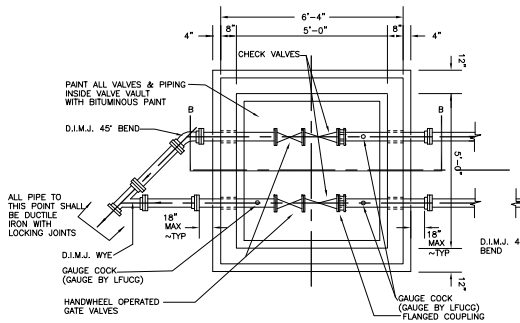

VALVE VAULT PLAN

NOT TO SCALE

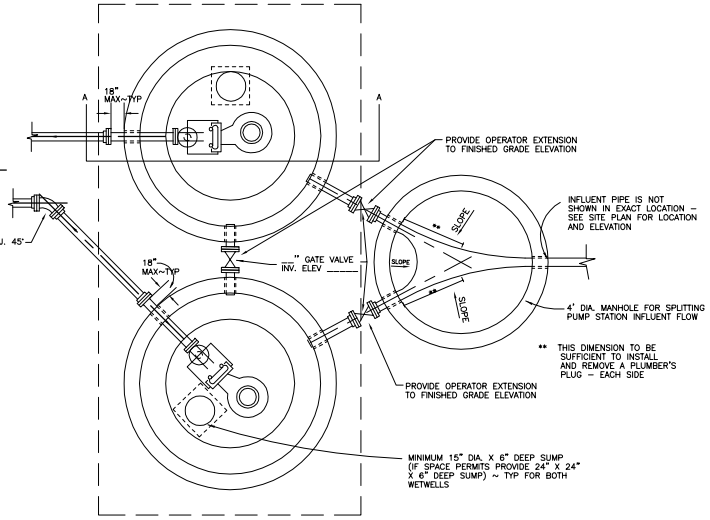

PUMP STATION PLAN

NOT TO SCALE

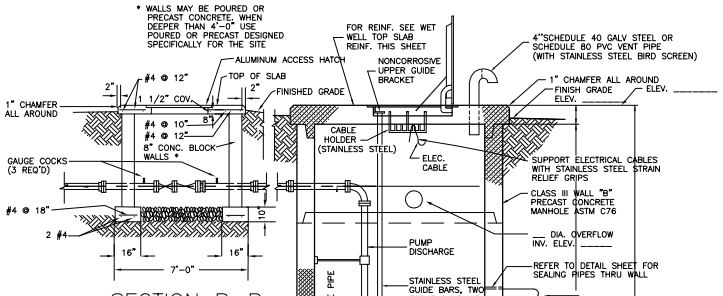

SECTION B–B

NOT TO SCALE

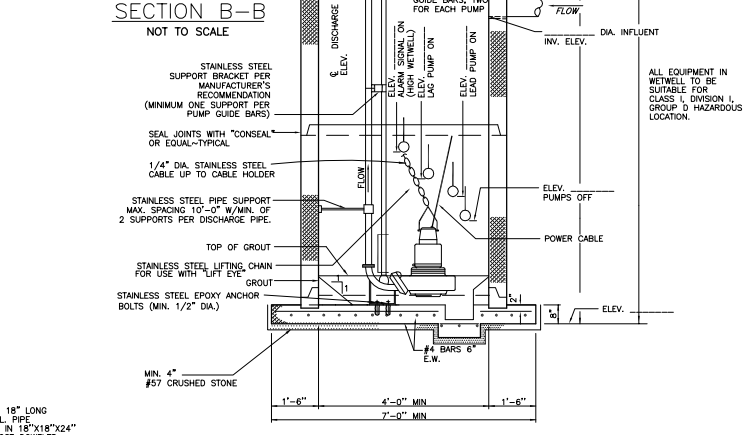

SECTION A–A

NOT TO SCALE

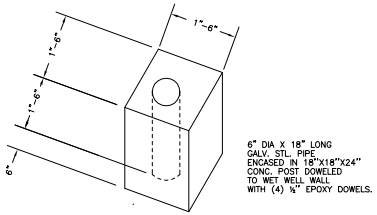

DETAIL "A"

NOT TO SCALE

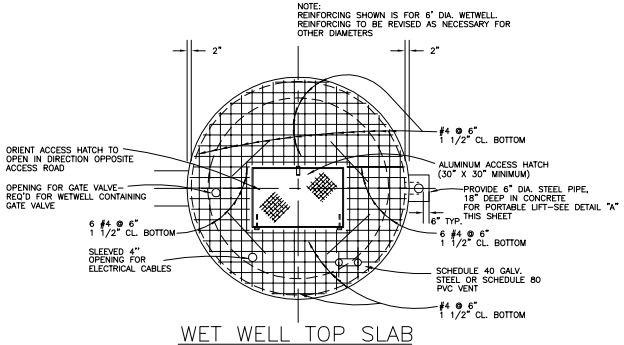

WET WELL TOP SLAB REINFORCING

NOT TO SCALE

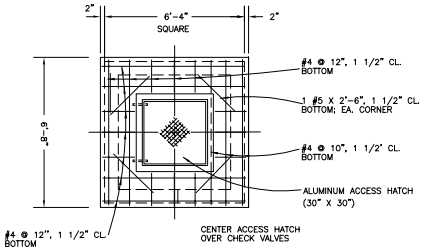

VALVE VAULT TOP SLAB REINFORCING

NOT TO SCALE

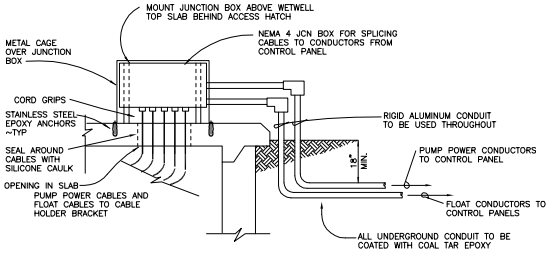

WETWELL ELECTRICAL CABLE ENTRY DETAIL

NOT TO SCALE

THIS DRAWING IS PROVIDED BY THE LFUCG FOR INFORMATIONAL PURPOSES ONLY, AS A SAMPLE OF DRAWING REQUIREMENTS. SUBMITTAL DRAWINGS ARE THE TOTAL RESPONSIBILITY OF THE DESIGN ENGINEER AND SHALL BE PREPARED AND STAMPED BY AN ENGINEER LICENSED TO PRACTICE IN THE COMMONWEALTH OF KENTUCKY.

CLASS C
DOUBLE WETWELL
SUBMERSIBLE PUMP STATION

1/1/09

STANDARD SANITARY SEWER DRAWING NO. PS401–0

LEXINGTON – FAYETTE URBAN COUNTY GOVERNMENT

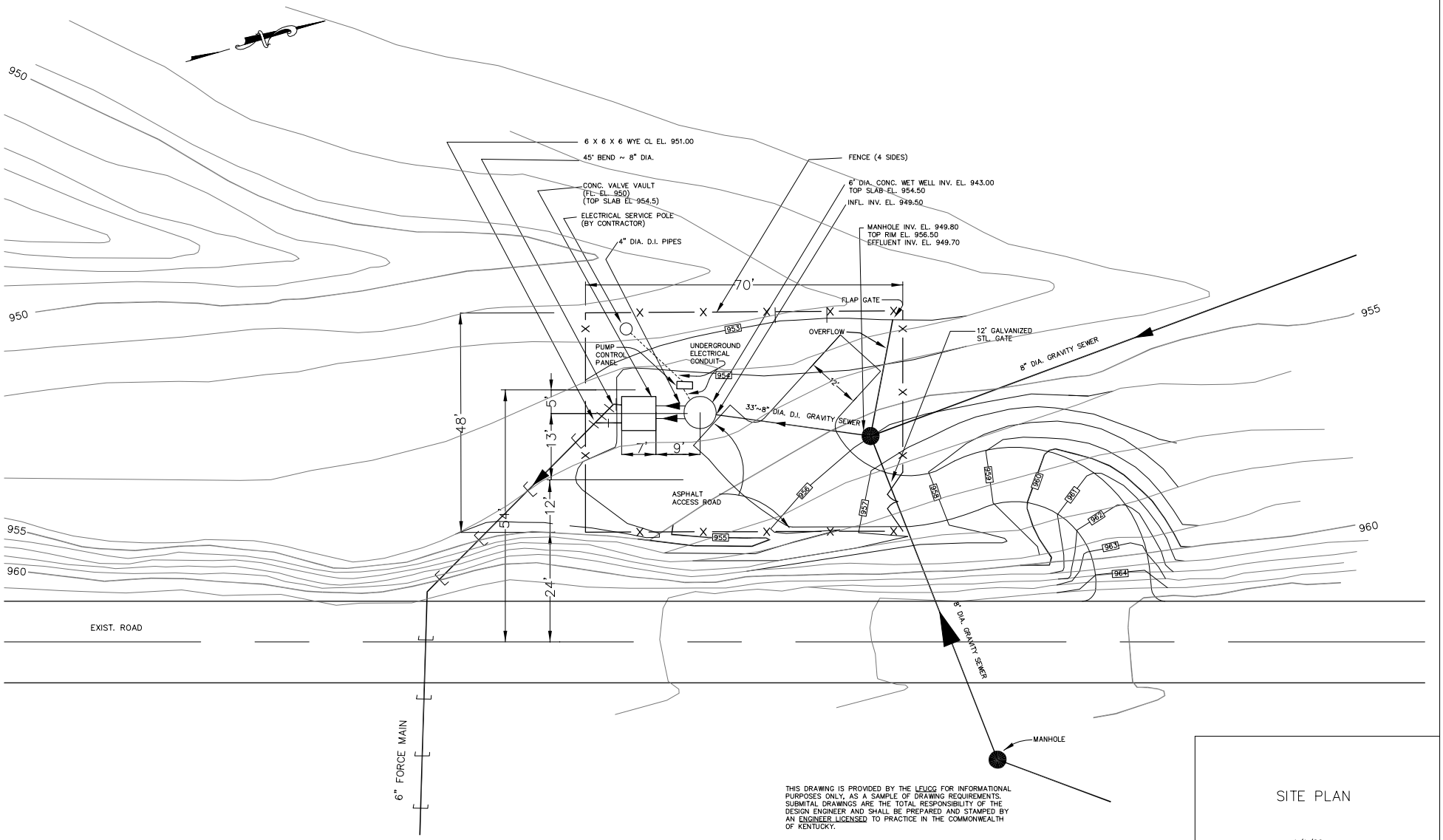

THIS DRAWING IS PROVIDED BY THE LFUCG FOR INFORMATIONAL PURPOSES ONLY, AS A SAMPLE OF DRAWING REQUIREMENTS. SUBMITAL DRAWINGS ARE THE TOTAL RESPONSIBILITY OF THE DESIGN ENGINEER AND SHALL BE PREPARED AND STAMPED BY AN ENGINEER LICENSED TO PRACTICE IN THE COMMONWEALTH OF KENTUCKY.

SITE PLAN

1/1/09

STANDARD SANITARY SEWER DRAWING NO. PS403-0

LEXINGTON – FAYETTE URBAN COUNTY GOVERNMENT

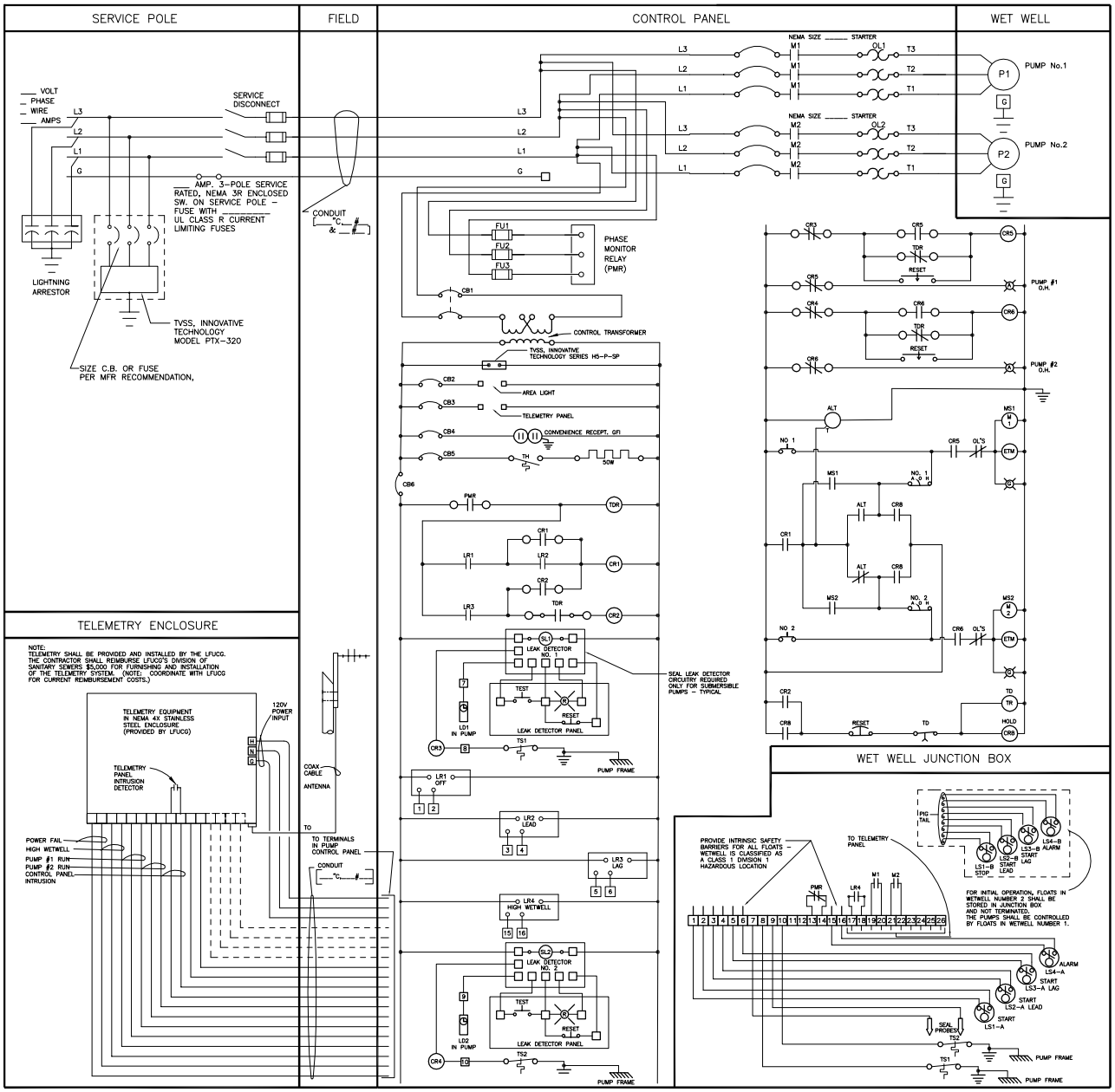

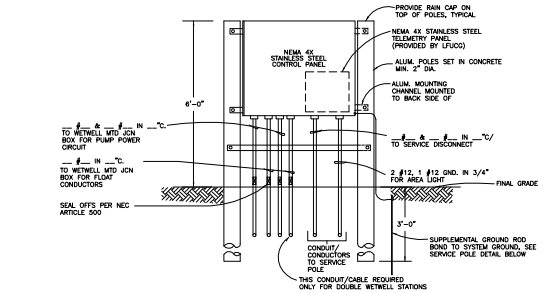

SUBMERSIBLE PUMP STATION CONTROL PANEL MOUNTING
NOT TO SCALE

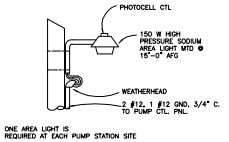

AREA LIGHT MOUNTING
NOT TO SCALE

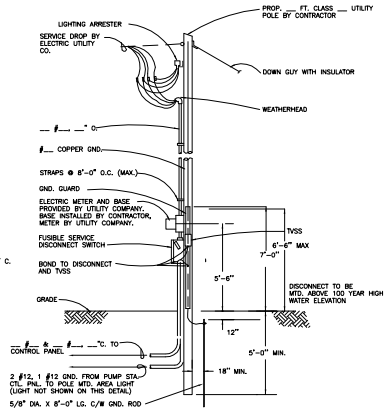

ELECTRICAL SERVICE POLE
NOT TO SCALE

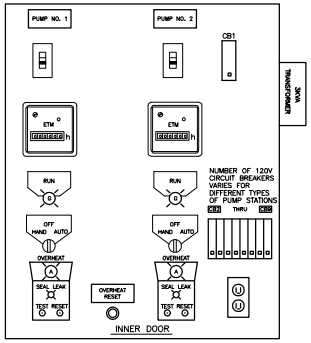

CONTROL PANEL
FRONT ELEVATION

THIS DRAWING IS PROVIDED BY THE LFUCG FOR INFORMATIONAL PURPOSES ONLY, AS A SAMPLE OF DRAWING REQUIREMENTS. SUBMITAL DRAWINGS ARE THE TOTAL RESPONSIBILITY OF THE DESIGN ENGINEER AND SHALL BE PREPARED AND STAMPED BY AN ENGINEER LICENSED TO PRACTICE IN THE COMMONWEALTH OF KENTUCKY.

ELECTRICAL CONTROL PANEL & MISCELLANEOUS ELECTRICAL DETAILS

1/1/09

STANDARD SANITARY SEWER DRAWING NO. PS404-0

LEXINGTON - FAYETTE URBAN COUNTY GOVERNMENT

* ALL PIPE AND FITTINGS TO BE BLOCKED SHALL BE WRAPPED TO PREVENT PERMANENT ENCASEMENT OF JOINTS.

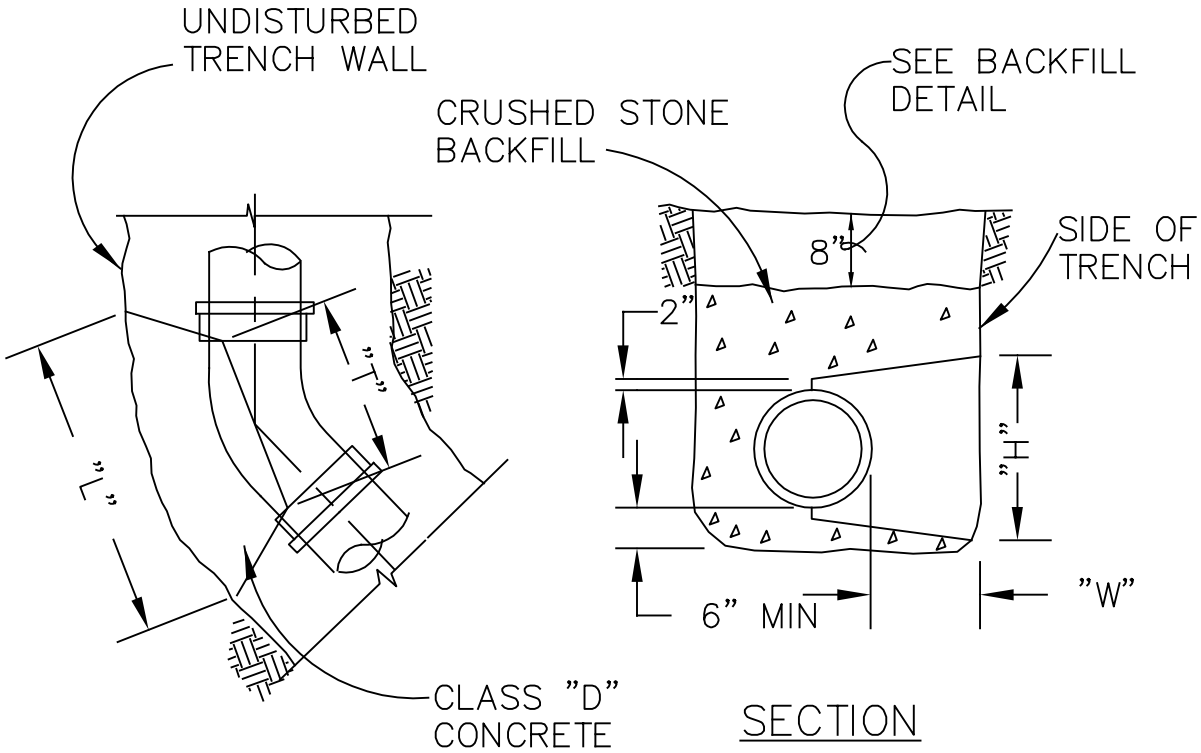

45° BEND					
SIZE D	4"	6"	8"	10"	12"
W	8"	8"	10"	12"	12"
L	14"	18"	20"	22"	27"
H	14"	16"	18"	20"	24"
T	13"	15"	16"	18"	18"

90° BEND					
SIZE D	4"	6"	8"	10"	12"
W	8"	8"	10"	12"	12"
L	14"	24"	30"	35"	40"
H	14"	16"	18"	24"	30"
T	13"	16"	18"	20"	22"

HORIZ. & VERT. BENDS & CONCRETE BACKING

1/1/09

STANDARD SANITARY SEWER DRAWING NO. PS406-0

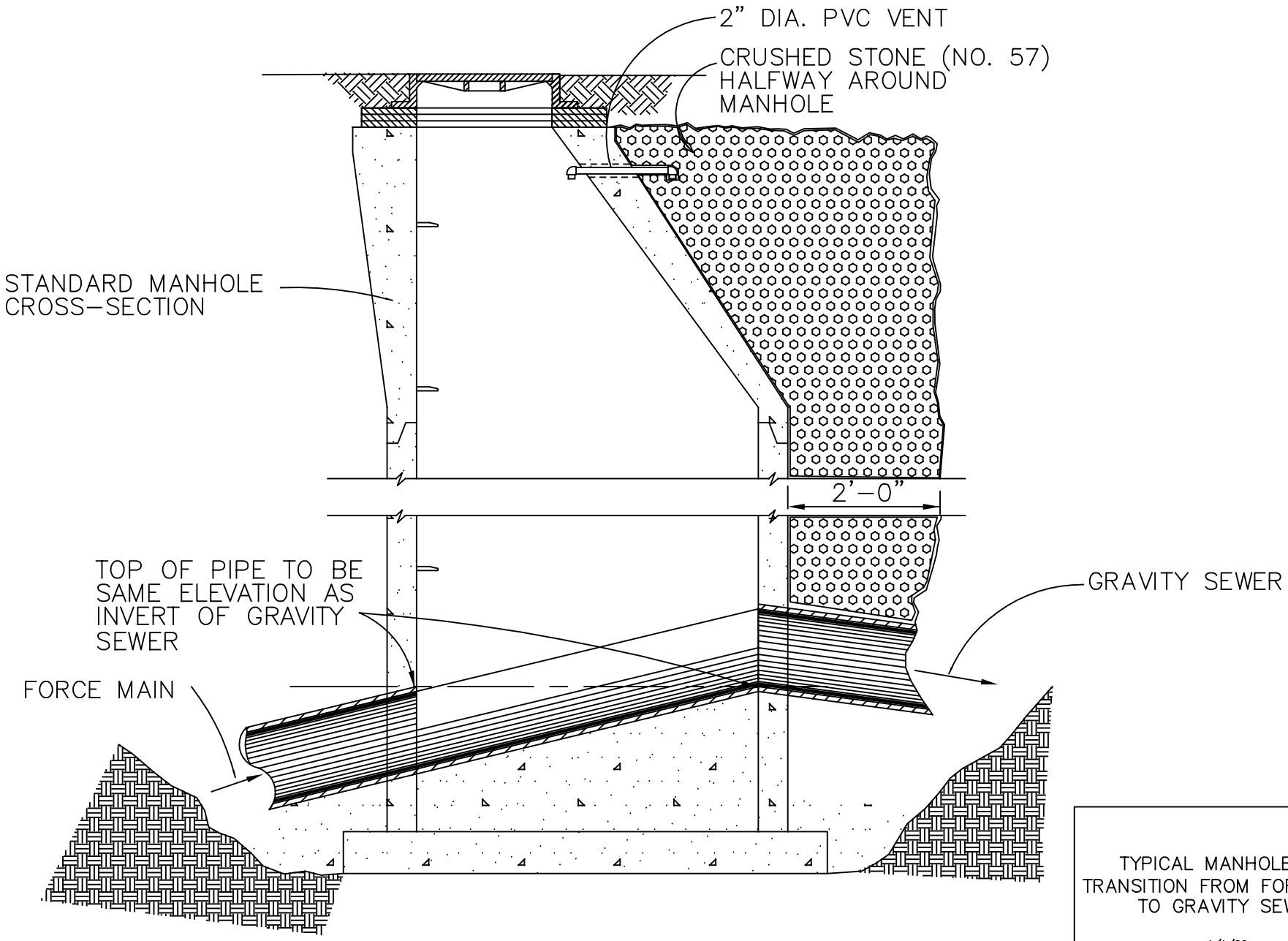

TYPICAL MANHOLE FOR TRANSITION FROM FORCE MAIN TO GRAVITY SEWER

1/1/09

STANDARD SANITARY SEWER DRAWING NO. PS407-0

LEXINGTON – FAYETTE URBAN COUNTY GOVERNMENT

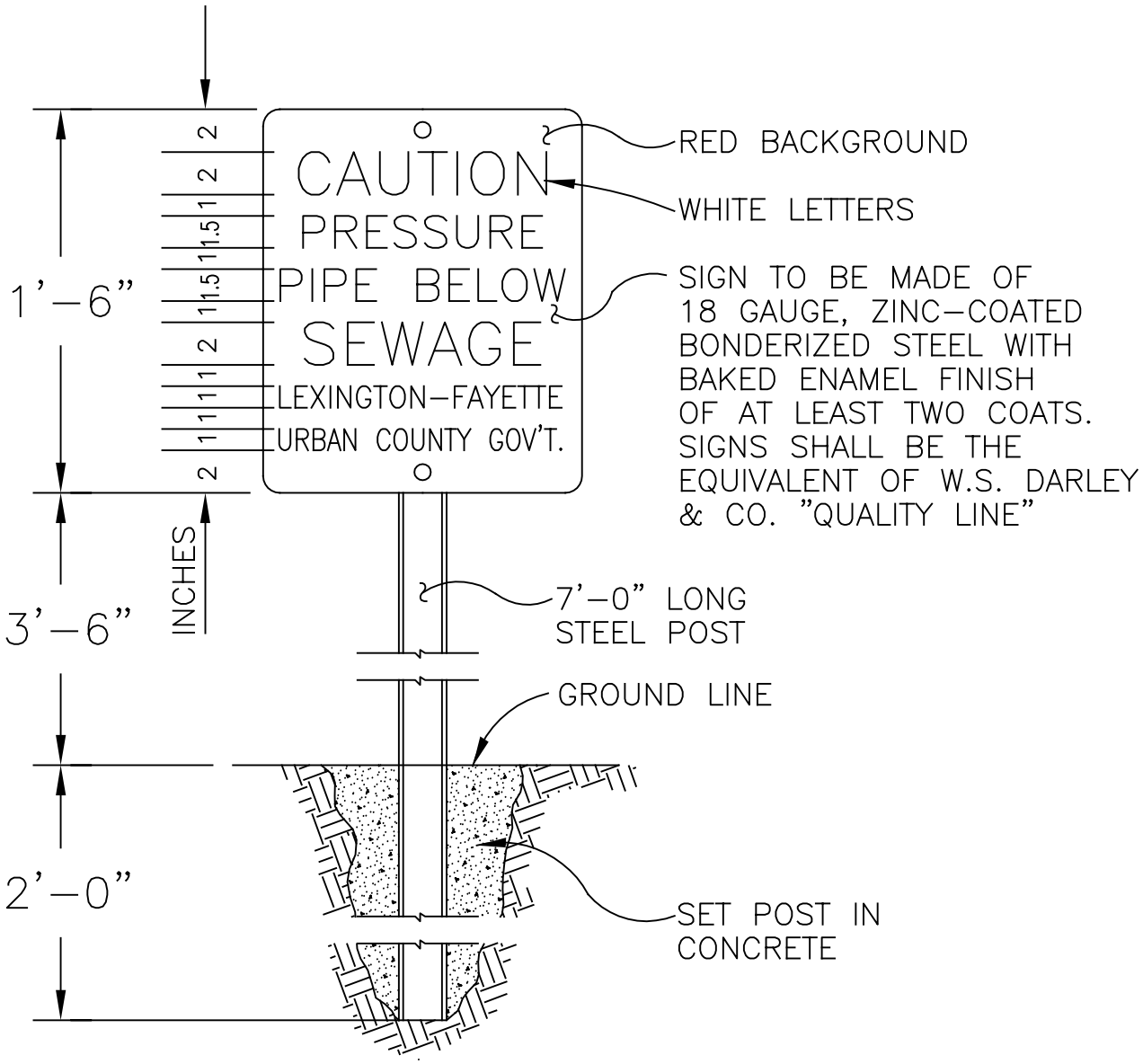

STEEL POST AND
LINE MARKER

1/1/09

STANDARD SANITARY SEWER DRAWING NO. PS408–0

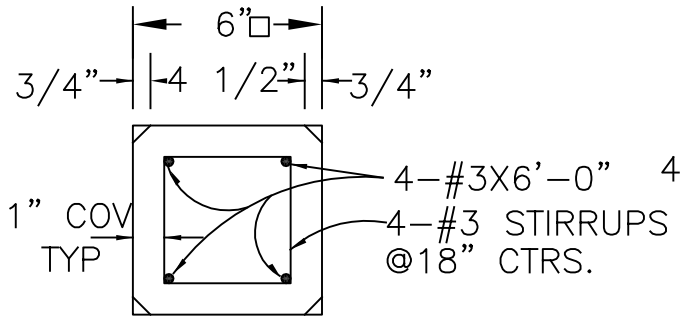

SECTION "A"

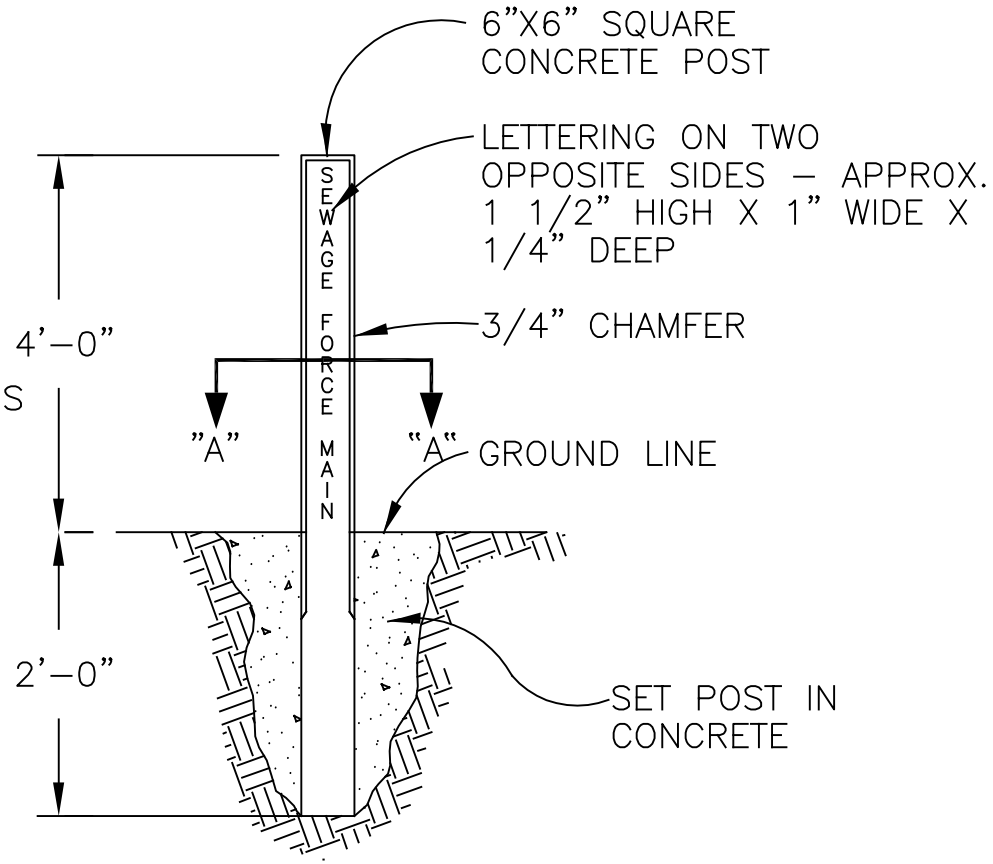

CONCRETE LINE MARKER

1/1/09

STANDARD SANITARY SEWER DRAWING NO. PS409–0

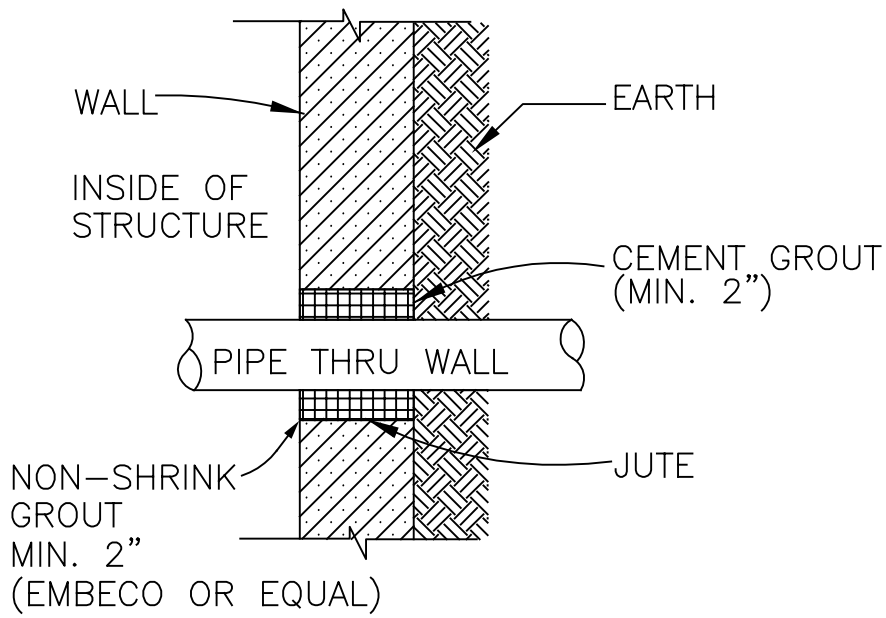

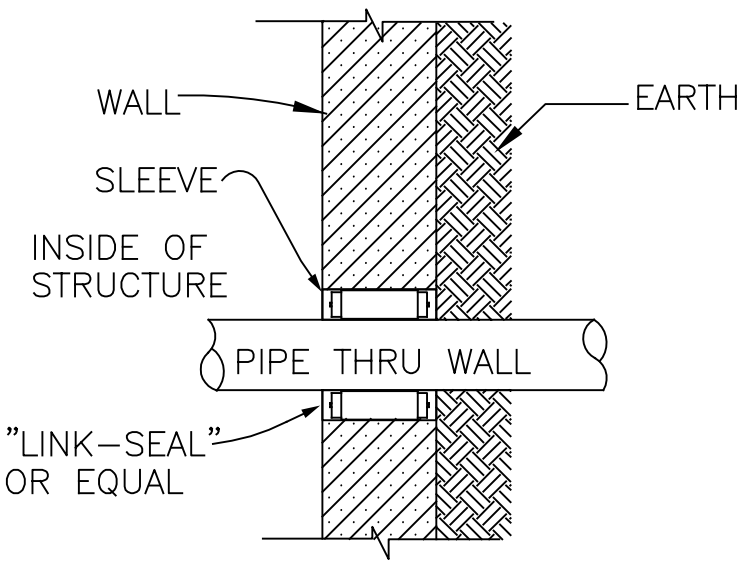

WALL PENETRATION DETAIL

1/1/09

STANDARD SANITARY SEWER DRAWING NO. PS410-0

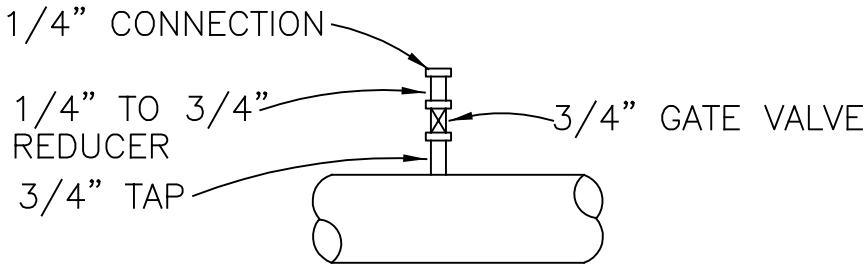

GAUGE TAP DETAIL

1/1/09

STANDARD SANITARY SEWER DRAWING NO. PS411-0

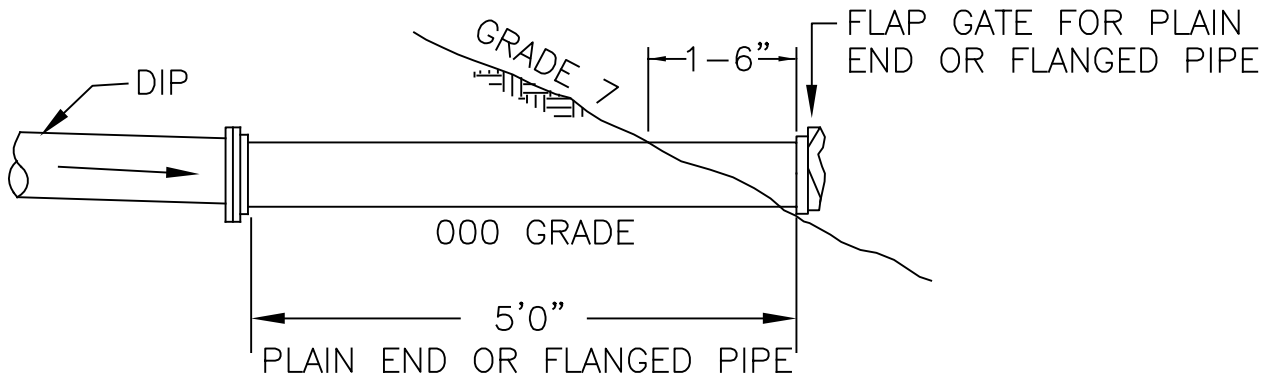

FLAP GATE INSTALLATION

1/1/09

STANDARD SANITARY SEWER DRAWING NO. PS412-0

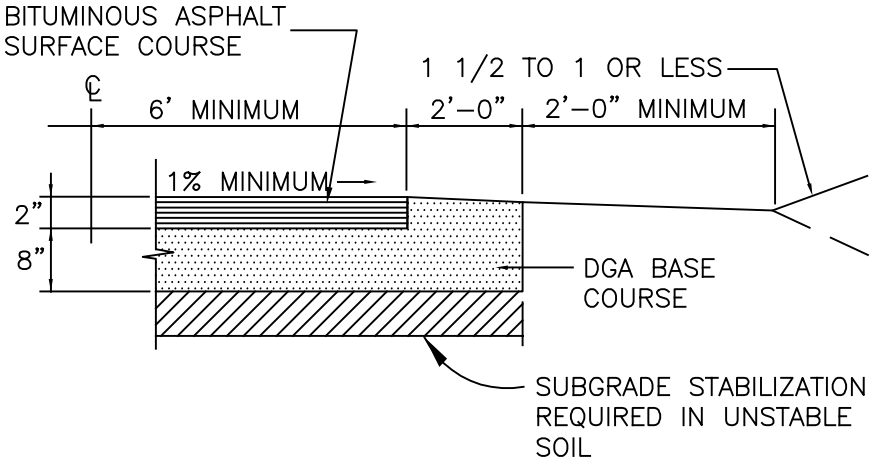

ASPHALT PUMP STATION
ACCESS ROAD

1/1/09

STANDARD SANITARY SEWER DRAWING NO. PS413–0

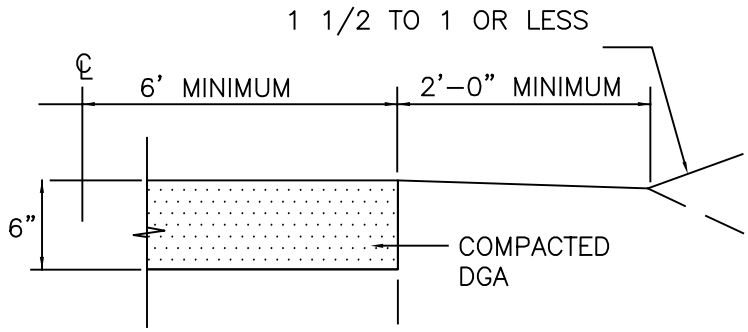

NOTE:
ASPHALT ACCESS ROAD REQUIRED UNLESS DEVIATION APPROVED BY LFUCG.

CRUSHED STONE
ACCESS ROAD

1/1/09

STANDARD SANITARY SEWER DRAWING NO. PS414-0

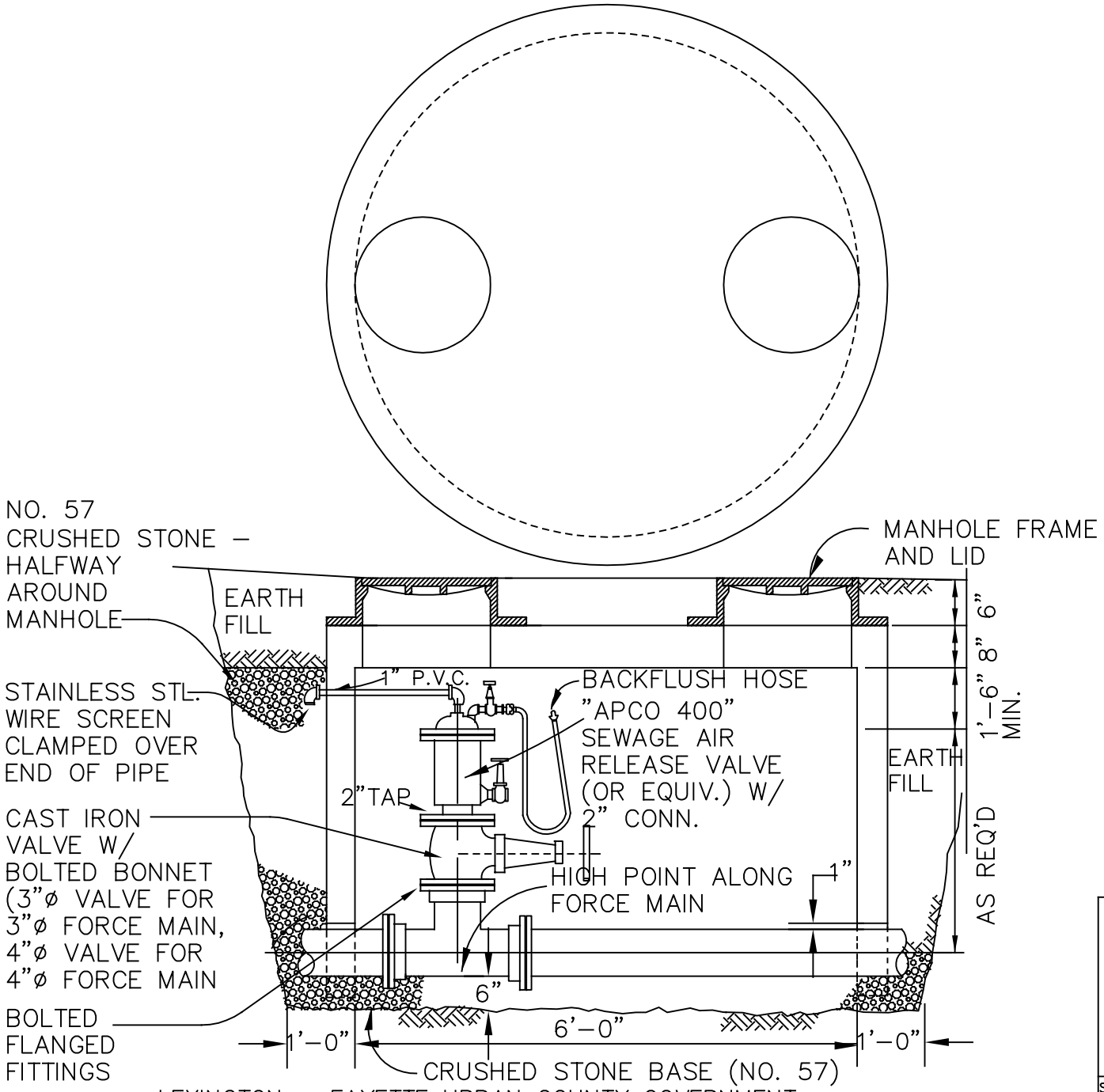

AUTOMATIC AIR
RELEASE ASSEMBLY

1/1/09

STANDARD SANITARY SEWER DRAWING NO. PS415–0

LEXINGTON – FAYETTE URBAN COUNTY GOVERNMENT

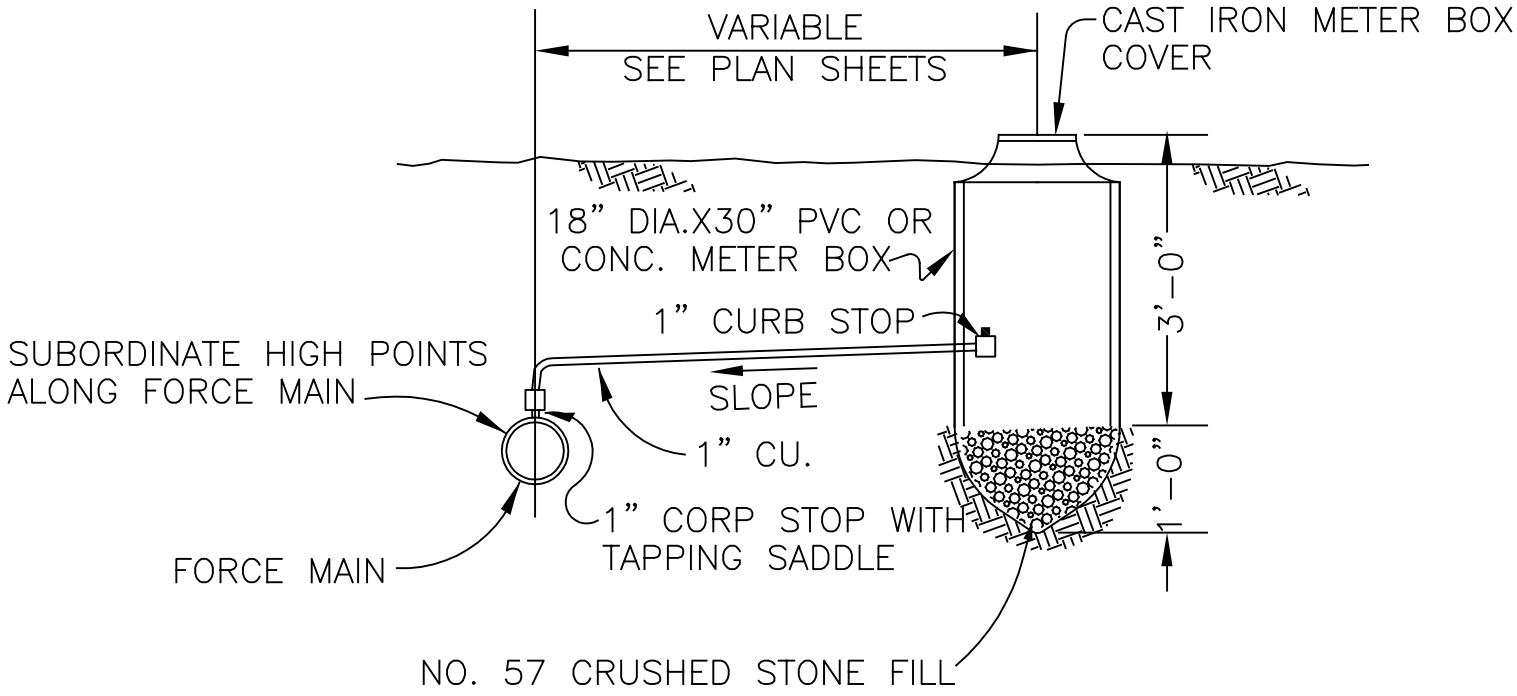

MANUAL AIR RELEASE ASSEMBLY

1/1/09

STANDARD SANITARY SEWER DRAWING NO. PS416-0

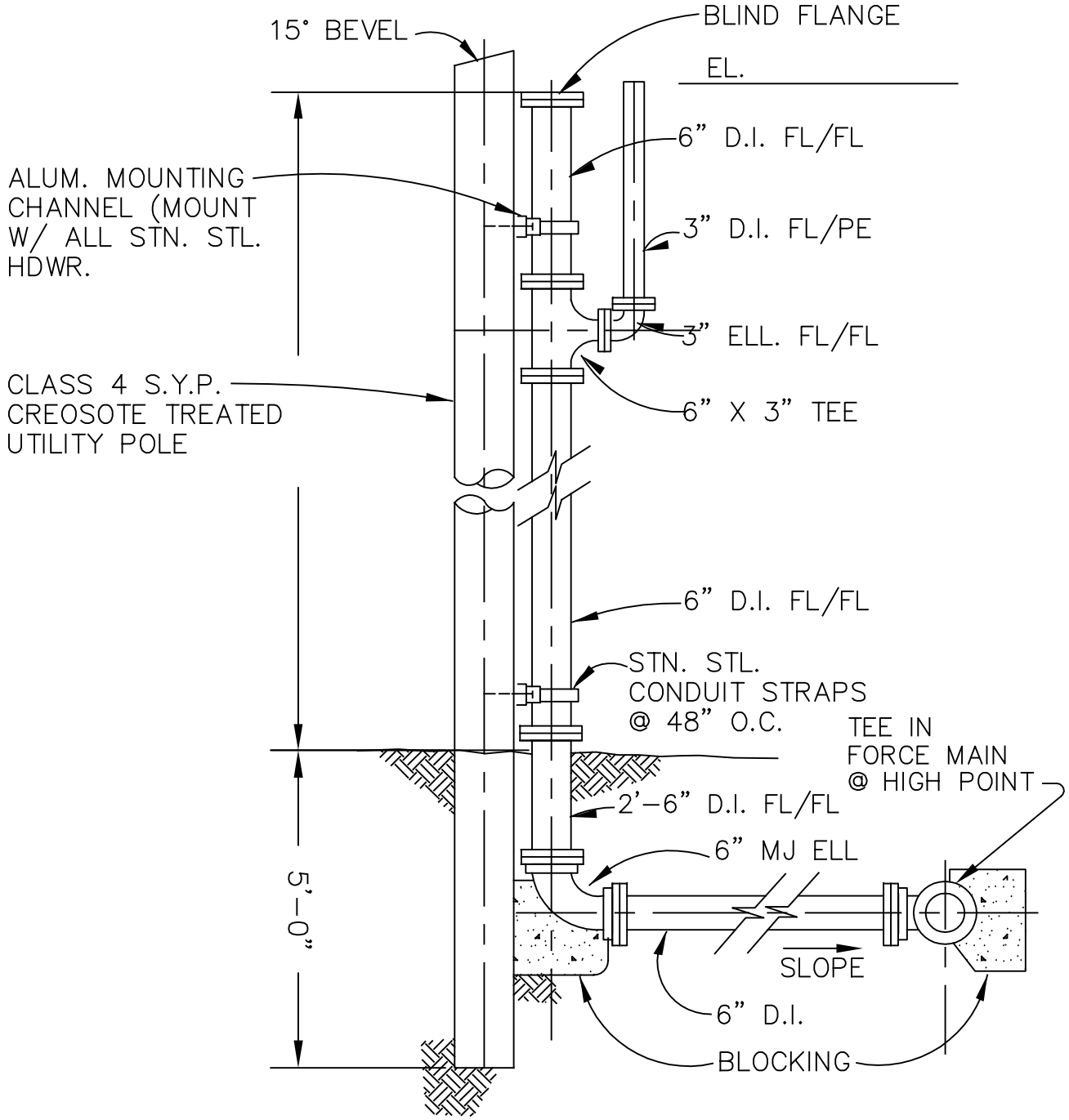

NON-MECHANICAL AIR RELEASE

1/1/09

STANDARD SANITARY SEWER DRAWING NO. PS417-0

APPENDIX C – CONSTRUCTION SPECIFICATIONS

SECTION 02225

EXCAVATING, BACKFILLING, AND COMPACTING FOR SEWERS

PART 1 - GENERAL

1.01 SUMMARY

A. Excavating of trenches.

B. Bedding of pipe.

C. Backfilling trenches.

D. Installing Identification Tape.

PART 2 - PRODUCTS

2.01 BEDDING AND BACKFILLING STONE

A. Crushed Stone material shall conform to the Kentucky Transportation Cabinet's Standard Specifications for Road and Bridge Construction, Current Edition, latest revision.

B. Bedding Stone: No. 9 Crushed Stone.

C. Backfill Stone: No. 9 Crushed Stone.

PART 3 - EXECUTION

3.01 GENERAL REQUIREMENTS

A. Trenching may be accomplished by means of a backhoe, trenching machine or by hand depending on the construction area. At the Contractor's option, trenching by a trenching machine or by backhoe is acceptable except as noted below:

1. Where the pipe line parallels a state highway and is being installed within the limits of the shoulder, a trenching machine must be used whenever practicable.

2. Where the pipe line is being constructed close to other utilities, structures, building, or large trees, and it is reasonable to anticipate possible damage from the use of a backhoe, then trenching shall be made by hand methods.

B. Clearing - All trees, stumps, bushes, shrubbery, and abandoned concrete or masonry structures within the limits of the trench shall be removed by the Contractor and disposed of in a manner satisfactory to the land owner and in accordance with federal, state, and local regulations. All clearing work shall be considered as incidental to the cost of laying pipe.

C. Bracing and Sheeting - In areas of unstable soils, bracing and sheeting shall be provided to adequately protect the workers during pipe line installation.

1. All requirements of the Occupational Safety and Health Act (OSHA) shall be met during trenching and backfill operations.

2. When sheeting and bracing are required, the trench width shall not be less than specified herein. As backfill is placed, the sheeting shall be withdrawn in increments not exceeding one (1) foot and the void left by the withdrawn sheeting shall be filled and compacted.

3. The Engineer will not be responsible for determining requirements for bracing or sheeting.

D. Excavated materials shall be piled in a manner that will not endanger the Work and will avoid obstructing driveways and sidewalks. Gutters shall be kept clear or other satisfactory provisions made for street drainage.

3.02 TRENCHING

A. General:

1. The Contractor shall perform all excavation of every description and of whatever substances encountered, including clearing over the pipe line route. All excavations for the pipe line shall be open-cut except at paved city and county roads, state and federal highways, railroads and blacktop or concrete driveways which shall be bored unless otherwise approved by Engineer. Banks of excavations shall be kept as nearly vertical as possible.

2. Trench widths at the top of the pipe shall not be less than or greater than that given in the following table:

ALLOWABLE TRENCH WIDTHS		
Pipe Diameter (inches)	**Minimum Width (inches)**	**Maximum Width (inches)**
4 & less	16	28
6	18	30
8	20	32
10	22	34
12	24	36
14	26	38
16	28	40
18	30	42
20	32	44

B. Trench Depth:

1. The trench shall be excavated to a depth sufficient to provide 48 inches of cover over the pipe. In addition, excavation shall be carried to a minimum of six (6) inches below pipe grade in rock.

C. Blasting for excavation will be permitted only when proper precautions are taken for the protection of persons and property. Any damage caused by the blasting shall be repaired by the Contractor at his expense. The Contractor's methods of blasting and procedure shall conform to federal, state, and local laws and municipal ordinances. The Engineer will not be responsible, nor direct in any way, blasting practices of the Contractor.

3.03 FORCE MAIN BEDDING

A. Refer to LFUCG Standard Drawings.

B. The trench shall be excavated to a depth to allow a minimum of 48 inches cover over the top of the pipe.

C. When the subgrade is found to be unstable or to include ashes, cinders, refuse, organic material, or other unsuitable material, such material shall be removed to the depth ordered by the Engineer and replaced under the directions of the Engineer with clean, stable backfill material. When the bottom of the trench or the subgrade is found to consist of material that is unstable to such a degree that, in the judgment of the Engineer it cannot be removed, a foundation for the pipe and/or appurtenance shall be constructed using piling, concrete, or other materials at the direction of the Engineer.

3.04 FORCE MAIN BACKFILLING

A. Refer to LFUCG Standard Drawings

3.05 GRAVITY SEWER PIPE BEDDING

A. Refer to LFUCG Standard Drawings.

B. When the subgrade is found to be unstable or to include ashes, cinders, refuse, organic material, or other unsuitable material, such material shall be removed to the depth ordered by the Engineer and replaced under the directions of the Engineer with clean, stable backfill material. When the bottom of the trench or the subgrade is found to consist of material that is unstable to such a degree that, in the judgement of the Engineer it cannot be removed, a foundation for the pipe and/or appurtenance shall be constructed using piling, concrete, or other materials at the direction of the Engineer.

3.06 GRAVITY SEWER PIPE BACKFILLING

A. Refer to LFUCG Standard Drawings.

1. Final backfill beneath existing driveways, and beneath existing and proposed roads, shall be No. 9 Crushed Stone up to the subgrade of vehicular traffic surface courses. This does not apply to driveways in subdivisions under construction, because the location of driveways is unknown at the time the sewer is constructed.

3.07 INSTALLING IDENTIFICATION TAPE

A. Detectable underground marking tape shall be installed over all utility lines. Care shall be taken to insure that the buried marking tape is not broken when installed and shall be Lineguard brand encased aluminum foil, Type III. The identification tape is manufactured by Lineguard, Inc., P.O. Box 426, Wheaton, IL 60187.

B. The identification tape shall bear the printed identification of the plastic utility line below it, such as "Caution - Buried Below." Tape shall be reverse printed; surface printing will not be acceptable. The tape shall be visible in all types and colors of soil and provide maximum color contrast to the soil. The tape shall meet the APWA color code, and shall be two (2) inches in width. Colors are green for sewer and brown for force main.

- END OF SECTION -

SECTION 02608

MANHOLES

PART 1 - GENERAL

1.01 SUMMARY

The Contractor shall furnish all labor, material, and equipment necessary to construct manholes for sanitary and/or storm sewers, including steps, frames, and covers, together with all appurtenances as shown and detailed on the Drawings and specified herein. Manhole materials shall be precast concrete.

1.02 DEFINITIONS

A. Standard Manhole: A standard manhole is defined as any manhole that is greater than 5 feet in depth, as measured from the invert of the manhole base at its center to the top (rim) of the manhole cover.

B. Shallow Manhole: A shallow manhole is defined as any manhole that is 5 feet or less in depth, as measured in the preceding sentence.

PART 2 - PRODUCTS

2.01 CONCRETE MANHOLES - GENERAL

A. Manholes shall conform in shape, size, dimensions, materials, and other respects as shown on the Drawings or specified herein.

B. All concrete manholes shall have precast reinforced concrete developed bases. No other type of base will be allowed. Invert channels shall be factory constructed when the base is made. Sloping invert channels shall be constructed whenever the difference between the inlet and outlet elevation is 2 feet or less.

C. The concrete manhole walls (barrels and cones) shall be precast concrete sections. The top of the cone shall be built of reinforced concrete adjustment rings to permit adjustment of the frame to meet the finished surface. Minimum strength of the concrete for the precast sections shall be 4,000 psi at the time of shipment.

D. For concrete manholes, the inverts of the developed bases shall conform accurately to the size of the adjoining pipes. Side inverts shall be curved and main inverts (where direction changes) shall be laid out in smooth curves of the longest possible radius which is tangent, within the manhole, to the centerlines of adjoining pipelines.

E. For concrete manholes, the cast iron frames and covers shall be the standard frame and cover as indicated on the Drawings and specified herein.

F. Manholes shall be manufactured by Kentucky Precast, or approved equal.

2.02 PRECAST CONCRETE SECTIONS

A. Precast concrete sections and appurtenances shall conform to the ASTM Standard Specifications for Precast Reinforced Concrete Manhole Sections, Designation C478, latest revision, with the following exceptions and additional requirements.

B. The base section shall be monolithic for 4-foot diameter manholes. Manholes with diameter of 5 feet or larger shall have base slab.

C. The wall sections shall be not less than 5 inches thick.

D. Type II cement shall be used except as otherwise permitted.

2.03 CONCRETE MANHOLE - FRAMES AND COVERS

A. The Contractor shall furnish all cast iron manhole frames and covers conforming to the Drawings or as specified herein.

B. The castings shall be of good quality, strong, tough, evengrained cast iron, smooth, free from scale, lumps, blisters, sandholes, and defects of every nature which would render them unfit for the service for which they are intended. Contact surfaces of covers and frame seats shall be machined to prevent rocking of covers.

C. All casting shall be thoroughly cleaned and subject to a careful hammer inspection.

D. Castings shall be at least Class 25 conforming to the ASTM Standard Specifications for Gray Iron Casting, Designation A48, latest revision.

E. Unless otherwise specified, manhole covers shall be 22-3/4 inches in diameter, weighing not less than 350 pounds per frame and cover. Manhole covers shall set neatly in the rings, with contact edges machined for even bearings and tops flush with ring edge. They shall have sufficient corrugations to prevent slipperiness. The covers shall have two (2) pick holes about 1-1/4 inches wide and 1/2 inch deep with 3/8-inch undercut all around. Covers shall not be perforated. Frames and covers shall be J.R. Hoe and Sons, Mc-350, or approved equal.

F. All covers shall be marked in large letters "SANITARY SEWER".

2.04 MANHOLE STEPS (CONCRETE MANHOLES)

Manholes steps shall be the polypropylene plastic type reinforced with a 1/2 inch diameter deformed steel rod. The step shall be 10-3/4 inches wide and extend 5-3/4 inches from the manhole wall. Steps shall line up over the downstream invert of the manhole. The steps shall be embedded into the manhole wall a minimum of 3-3/8 inches. Steps shall be uniformly spaced at 12-inch to 16-inch intervals.

2.05 PREMOLDED ELASTOMERIC-SEALED JOINTS

All holes for pipe connections in concrete barrels and bases shall have a factory-installed flexible rubber gasket to prevent infiltration. The manhole boots shall conform to the latest revision of ASTM-C923. The boots shall be Contour Seal or Kor-N-Seal manufactured by National Pollution Control Systems, Inc., Nashua, NH; A-Lok Manhole Pipe Seal manufactured by A-Lok Corporation, Trenton, NJ; or an approved equal.

2.06 POLYETHYLENE DIAPHRAGM

A. Polyethylene diaphragm manhole inserts shall be manufactured from corrosion-proof material suitable for atmospheres containing hydrogen sulfide and diluted sulfuric acid. Diaphragm shall be installed in manholes susceptible to inflow as indicated on the Drawings.

B. The body of the manhole insert shall be made of high density polyethylene copolymer material meeting ASTM Specification D 1248, Class A, Category 5, Type III (the insert shall have a minimum impact brittleness temperature of -180 degrees Fahrenheit). The thickness shall be uniform 1/8 inch or greater. The manhole insert shall be manufactured to dimensions as shown on the Drawings to allow easy installation within the manhole frame.

C. Gaskets shall be made of closed cell neoprene. The gasket shall have a pressure sensitive adhesive on one side and shall be placed under the weight bearing surface of the insert by the manufacturer. The adhesive shall be compatible with the manhole insert material so as to form a long lasting bond in either wet or dry conditions.

D. Lift strap shall be attached to the rising edge of the bowl insert. The lift strap shall be made of 1 inch wide woven polypropylene web and shall be seared on all cut ends to prevent unraveling. The lift strap shall be attached to the manhole insert by means of a stainless steel rivet. Location of the lift strap shall provide easy visual location.

E. Standard ventilation shall be by means of a valve or vent hole. Vent holes shall be on the side wall of the manhole insert approximately 3/4 inch below the lip. The valve or vent hole will allow a maximum release of 10 gallons per 24 hours when the insert is full.

F. The manhole insert shall be manufactured to fit the manhole frame rim upon which the manhole cover rests. The Contractor is responsible for obtaining specific measurements of each manhole cover to insure a proper fit. The manhole frame shall be cleaned of all dirt, scale and debris before placing the manhole insert on the rim.

2.07 CLEANOUTS

Cleanouts shall be cast iron and extend to the finish grade and capped with a clean-out plug in accordance with details and at locations shown on the Drawings. Pipe shall be the same size as the gravity sewer line in which the cleanout is located. A 4-inch thick concrete pad, with 6" x 6", 1.9 x 1.9 wire mesh, 24 inches square, with the valve box lid section, shall be provided around each cleanout.

2.08 DROP CONNECTIONS

Drop connections shall be installed in the manhole as shown on the Drawings. The pipe material inside the drop manhole shall be of the same material as the sanitary sewer line. Any deviation from the standard drawing shall be approved by the Division of Engineering and the Division of Water Quality.

PART 3 - EXECUTION

3.01 FABRICATION - PRECAST SECTIONS

A. Manhole sections shall contain manhole steps accurately positioned and embedded in the concrete when the section is cast.

B. Sections shall be cured in an enclosed curing area and shall attain a strength of 4,000 psi prior to shipment.

C. Knuckle hooks are preferred.

D. Flat slab tops shall have a minimum thickness of 6 inches and reinforcement in accordance with ASTM C478.

E. The date of manufacture and the name or trademark of the manufacturer shall be clearly marked on the precast sections.

F. Acceptance of the sections will be on the basis of material tests and inspection of the completed product and test cylinders if requested by the Engineer.

G. Cones shall be precast sections of similar construction.

3.02 SETTING PRECAST MANHOLE SECTIONS

A. Refer to Standard Drawings.

B. Precast-reinforced concrete manhole sections shall be set so as to be vertical and with sections and steps in true alignment.

C. All holes in sections used for their handling shall be thoroughly plugged with rubber plugs made specifically for this purpose.

3.03 ADJUSTING MANHOLE FRAMES AND COVERS TO GRADE

A. Except where shown on the Drawings, the top of the precast concrete eccentric cone of a standard manhole or the top of the flat slab of a shallow manhole shall terminate 4 inches below existing grade in an unpaved non-traffic area except in a residential yard and 13 inches below existing grade in a paved or unpaved traffic area and in a residential yard. The remainder of the manhole shall be adjusted to the required grade as described hereinafter in paragraphs B and C of this article.

B. When a manhole is located in an unpaved non-traffic area other than in a residential yard, the frame and cover shall be adjusted to an elevation 3 inches to 5 inches above the existing grade at the center of the cover. If field changes have resulted in the installed manhole invert elevation to be lower than the invert elevation shown on the Drawings, the adjustment to an elevation of 3 inches to 5 inches above existing grade shall be accomplished by the use of precast concrete adjusting rings. If field changes have resulted in the completed manhole invert to be greater than the invert shown on the Drawings and the cover higher than 5 inches above existing grade, then the top of the eccentric cone, when used, or the top of the barrel section, when used, shall be trimmed down so that the manhole cover, after installation, is no greater than 5 inches above existing grade at the center of the cover. The area around the adjusted frame and cover shall be filled with the required material, sloping it away from the cover at a grade of 1 inch per foot.

C. When a manhole is located in a bituminous, concrete, or crushed stone traffic area, or in a residential yard, the frame and cover shall be adjusted to the grade of the surrounding area by the use of precast concrete adjusting rings. The adjusted cover shall conform to the elevation and slope of the surrounding area. If field changes have resulted in the installed manhole invert elevation to be so much higher than the invert elevation shown on the Drawings that the top of the eccentric cone, when used, or the top of the flat slab, when used, is less than the thickness of the frame and cover 7 inches from the grade of the surrounding area, then the top of the cone or barrel section shall be trimmed down enough to permit the cover, after installation, to conform to the elevation and slope of the surrounding area. After installation, the inside and outside surfaces shall receive a waterproofing bitumastic coating.

1. The Contractor shall coordinate elevations of manhole covers in paved streets with the LFUCG. If resurfacing of the street in which sewers are laid is expected within

twelve (12) months, covers shall be set 1-1/2 inches above the existing pavement surface in anticipation of the resurfacing operations.

3.04 ADJUSTING SECTIONS

Only clean adjusting sections shall be used. Each adjusting section shall be laid in a bead of butyl mastic sealant and shall be thoroughly bonded.

3.05 SETTING MANHOLE FRAMES AND COVERS

A. Manhole frames shall be set with the tops conforming to the required elevations set forth hereinbefore. Frames shall be set concentric with the top of the concrete and in a full bead of butyl mastic sealant so that the space between the top of the masonry and the bottom flange of the frame shall be completely watertight.

B. Manhole covers shall be left in place in the frames on completion of other work at the manholes.

3.06 VACUUM TESTING (ASTM C1244)

A. Scope

1. This test method covers procedures for testing precast concrete manhole sections when using the vacuum test method to demonstrate the integrity of the installed materials and the construction procedures. This test method is used for testing concrete manhole sections utilizing mortar or mastic joints.

2. This test method is intended to be used as a preliminary test to enable the installer to demonstrate the condition of the concrete manholes prior to backfill. It may also be used to test manholes after backfilling; however, testing should be correlated with the connector supplier.

3. This standard does not purport to address all of the safety problems, if any, associated with its use. It is the responsibility of the user of this standard to establish appropriate safety and health practices and determine the applicability of regulatory limitations prior to use.

4. This test method is the companion to metric Test Method C 1244M; therefore, no SI equivalents are shown in this test method.

B. References, ASTM Standards:

1. C 822 Terminology Relating to Concrete Pipe and Related Products.

2. C 924 Practice for Testing Concrete Pipe Sewer Lines by Low-Pressure Air Test Method.

3. C 969 Practice for Infiltration and Exfiltration Acceptance Testing of Installed Precast Concrete Pipe Sewer Lines.

C. Terminology

For definitions of terms relating to manholes, see Terminology C 822.

D. Summary of Practice

All lift holes and any pipes entering the manhole are to be plugged. A vacuum will be drawn and the vacuum drop over a specified time period is used to determine the acceptability of the manhole.

E. Significance and Use

This is not a routine test. The values recorded are applicable only to the manhole being tested and at the time of testing.

F. Preparation of the Manhole

1. All lift holes shall be plugged.

2. All pipes entering the manhole shall be temporarily plugged, taking care to securely brace the pipes and plugs to prevent them from being drawn into the manhole.

G. Procedure

1. The test head shall be placed at the top of the manhole in accordance with the manufacturer's recommendations.

2. A vacuum of 10 inches of mercury shall be drawn on the manhole, the valve on the vacuum line of the test head closed, and the vacuum pump shut off. The time shall be measured for the vacuum to drop to 9 inches of mercury.

3. The manhole shall pass if the time for the vacuum reading to drop from 10 inches of mercury to 9 inches of mercury meets or exceeds the values indicated in the table below.

4. Vacuum test time shall be a minimum of one minute.

Minimum Test Times for Various Manhole Diameters (seconds)									
Depth (ft)	**Diameter (inches)**								
	30	**33**	**36**	**42**	**48**	**54**	**60**	**66**	**72**
1	1	2	2	2	2	3	3	4	4
2	3	3	4	4	5	6	7	7	8
3	4	5	5	6	7	9	10	11	12
4	6	6	7	9	10	12	13	15	16
5	7	8	9	11	12	14	16	18	20
6	8	10	11	13	15	17	20	22	24
7	10	11	12	15	17	20	23	26	28
8	11	12	14	17	20	23	26	29	33
10	14	15	18	21	25	29	33	36	41
12	17	18	21	25	30	35	39	43	49
14	20	21	25	30	35	41	46	51	57
16	22	24	28	34	40	46	52	58	67
18	25	27	32	38	45	52	59	65	73
20	28	30	35	42	50	58	65	72	81
22	31	33	39	46	55	64	72	79	89
24	33	36	42	51	59	69	78	87	97
26	36	39	46	55	64	75	85	94	105
28	39	42	49	59	69	81	91	101	113
30	42	45	53	63	74	87	98	108	121

4. If the manhole fails the initial test, necessary repairs shall be made by an approved method. The manhole shall then be retested until a satisfactory test is obtained.

5. Use or failure of this vacuum test shall not preclude acceptance by appropriate water infiltration or exfiltration testing, (see Practice C 969), or other means.

H. Precision and Bias

No justifiable statement can be made either on the precision or bias of this procedure, since the test result merely states whether there is conformance to the criteria for the success specified.

- END OF SECTION -

SECTION 02732

SEWAGE COLLECTION LINES

PART 1 - GENERAL

1.01 SUMMARY

The Contractor shall furnish all labor, material, and equipment necessary to install gravity sewer piping together with all appurtenances as shown and detailed on the Drawings and specified herein.

PART 2 – PRODUCTS

2.01 PIPE AND FITTINGS

A. Ductile Iron (DI) Pipe:

B. Scope: This article covers the design and manufacture of ductile iron certrifugally cast on metal molds and ductile iron fittings.

Specific Requirements: Ductile iron pipe shall be furnished cement lined unless otherwise noted on the drawings or in other sections of these specifications. Ductile iron pipe shall be furnished with rubber gasket push-on joints except as may otherwise be noted on the drawings or in difficult working areas and with approval of the Engineer.

1. Pressure class shall be 250 psi for pipe sizes 20 inches or smaller and pressure class 200 psi for pipe sizes larger than 20 inches for mechanical and push-on joint pipe.

2. Thickness design of ductile iron shall conform in all aspects to the requirements of ANSI/AWWA C150/A 21.50 latest revision.

3. Manufacture and testing of ductile iron pipe shall conform in all aspects to the requirements of ANSI/AWWA C151/A 21.51 latest revisions .

4. Pipe Coatings

a. Interior Lining

(1) Condition of Ductile Iron Prior to Surface Preparation

All ductile pipe and fittings shall be delivered to the application facility without asphalt, cement lining, or any other lining on the interior surface. Because removal of old linings may not be possible, the intent of this specification is that the entire interior of the ductile iron pipe and fittings shall not have been lined with any substance prior to the application of the specified lining material and no coating shall have been applied to the first six (6) inches of the exterior of the spigot ends.

(2) Lining Material

The standard of quality is Protecto 401 Ceramic Epoxy. The material shall be an amine cured novalac epoxy containing at least 20% by volume of ceramic quartz pigment. Any request for substitution must be accompanied by a successful history of lining pipe and fittings for sewer service, a test report verifying the following properties, and a certification of the test results.

(a) A permeability rating of 0.00 when tested according to Method A of ASTM E-96-66, Procedure A with a test duration of 30 days.

(b) The following test must be run on coupons from factory lined ductile iron pipe:

(b1) ASTM B-117 Salt Spray (scribed panel) – Results to equal 0.0 undercutting after two years.

(b2) ASTM G-95 Cathodic Disbondment 1.5 volts @ 77°F. Results to equal no more than 0.5mm undercutting after 30 days.

(b3) Immersion Testing rated using ASTM D-714-87.

- 20% Sulfuric Acid – No effect after two years.
- 25% Sodium Hydroxide – No effect after two years.
- 160°F Distilled Water – No effect after two years.
- 120°F Tap Water (scribed panel) – 0.0 undercutting after two years with no effect.

(c) An abrasion resistance of no more than 4 mils (.10mm) loss after one million cycles – European Standard EN 598: 1994 section 7.8 Abrasion resistance.

(3) Application

(a) Applicator

The lining shall be applied by a competent firm with a successful history of applying linings to the interior of ductile iron pipe and fittings.

(b) Surface Preparation

Prior to abrasive blasting, the entire area to receive the protective compound shall be inspected for oil, grease, etc. Any areas where oil, grease, or any substance which can be removed by solvent is present, shall be solvent cleaned using the guidelines outlined in DIPRA-1 Solvent Cleaning. After the surface has been made free of grease, oil, or other substances, all areas to receive the protective compounds shall be abrasively blasted using compressed air nozzles with sand or grit abrasive media. The entire surface to be lined shall be struck with the blast media so that all rust, loose oxides, etc., are removed from the surface. Only slight stains and tightly adhering annealing oxide may be left on the surface. Any area where rust reappears before lining must be reblasted.

(c) Lining

After the surface preparation and within eight (8) hours of surface preparation, the interior of the pipe shall receive 40 mils nominal dry film thickness of Protecto 401. No lining shall take place when the substrate or ambient temperature is below 40 degrees Fahrenheit. The surface also must be dry and dust free. If flange pipe or fittings are included in the project, the lining shall not be used on the face of the flange.

(d) Coating of Bell Sockets and Spigot Ends

Due to the tolerances involved, the gasket area and spigot end up to six (6) inches back from the end of the spigot end must be coated with 6 mils nominal, 10 mils maximum Protecto Joint Compound. The Joint Compound shall be applied by brush to ensure coverage. Care should be taken that the Joint Compound is smooth without excess buildup in the gasket seat or on the spigot ends. Coating of the gasket seat and spigot ends shall be done after the application of the lining.

(e) Number of Coats

The number of coats of lining material applied shall be as recommended by the lining manufacturer. However, in no case shall this material be applied above the dry thickness per coat recommended by the lining manufacturer in printed literature. The maximum or minimum time between coats shall be that time recommended by the lining material manufacturer. **No material shall be used**

for lining which is not indefinitely recoatable with itself without roughening of the surface.

(f) Touch-Up and Repair

Protecto Joint Compound shall be used for touch-up or repair in accordance with manufacturer's recommendations.

(4) Inspection and Certification

(a) Inspection

(a1) All ductile iron pipe and fitting linings shall be checked for thickness using a magnetic film thickness gauge. The thickness testing shall be done using the method outlined in SSPC-PA-2 Film Thickness Rating.

(a2) The interior lining of all pipe barrels and fittings shall be tested for pinholes with a non-destructive 2,500-volt test. Any defects found shall be repaired prior to shipment.

(a3) Each pipe joint and fitting shall be marked with the date of application of the lining system along with its numerical sequence of application on that date and records maintained by the applicator of his work.

(b) Certification

The pipe or fitting manufacturer must supply a certificate attesting to the fact that the applicator met the requirements of this specification, and that the material used was as specified.

(5) Handling

Protecto 401 lined pipe and fittings must be handled only from the outside of the pipe and fittings. No forks, chains, straps, hooks, etc., shall be placed inside the pipe and fittings for lifting, positioning, or laying.

b. Exterior Coating

Bituminous outside coating shall be in accordance with ANSI/AWWA C151/A 21.51 for pipe and ANSI/AWWA C110/A 21.10 for fittings.

5. Fittings and gaskets for mechanical and push-on joint ductile and cast iron pipe shall conform to the latest revisions of ANSI/AWWA C110/A 21.10 for

mechanical and push-on joint fittings, ANSI/AWWA C111/A 21.11 for gaskets, and ANSI/AWWA C153/A 21.53 for mechanical and push-on joint compact fittings. Mechanical and push-on joint fittings shall have pressure class rating of 250 psi for sizes 20 inches and smaller and 200 psi for sizes larger than 20 inches.

6. All ductile and cast iron fittings shall be ductile iron grade 80-60-03 in accordance with ASTM A339-55.

7. Flanged ductile iron pipe shall conform to the latest revisions of ANSI/AWWA C115/A 21.15. Bolt pattern of flange shall be in accordance with ANSI/AWWA C115/A 21.15 (which is equivalent to ASME/ANSI B16.1, Class 125 flange bolt pattern). Pipe shall have pressure class 250 rating. Gaskets shall be synthetic rubber ring gaskets with a thickness of 1/8 inch. Nuts and bolts shall be in accordance with ASME/ANSI B18.2.1, ASME/ANSI B18.2.2, ASME/ANSI B1.1, and ASTM A307.

8. Flanged fittings shall conform to the latest revisions of ANSI/AWWA C110/A 21.10 or ANSI/AWWA C153/A 21.53 (compact fittings). Gaskets shall be in accordance with ANSI/AWWA C111/A 21.11. Fittings shall have pressure class rating of 250 psi. Bolt pattern of flange shall be in accordance with ANSI/AWWA C115/A 21.15 (which is equivalent to ASME/ANSI B16.1, class 125 flange bolt pattern).

9. Restrained joint pipe and fittings shall be a boltless system equal to "Field-Lok" restraining gaskets or "TRFLEX Joint" as manufactured by U.S. Pipe & Foundry Company. All pipe inside of casing pipe shall have restraining gaskets.

10. Ball and socket restrained joint pipe and fittings shall be a boltless system equal to USIFLEX manufactured by U.S. Pipe & Foundry Company or FLEX-LOK manufactured by American Pipe Company. Pipe shall have a working pressure rating of 250 psi and have a maximum joint deflection of 15°. Nominal laying lengths shall be in range of 18 feet 6 inches to 20 feet 6 inches.

11. Manufacturers

    Pipe shall be as manufactured by U.S. Pipe & Foundry Company, Clow, American Cast Iron Pipe Company, or equal.

12. Marking

    Pipe or fitting shall have the ANSI/AWWA standard, pressure (or thickness) class, diameter, DI or ductile noted, manufacturer, and country and year where cast on the outside of the body.

13. No separate pay item has been established for fittings and no determination of the number of fittings required on the job has been made. The Contractor, during the bidding phase, shall determine the number of fittings required on the job and include the cost of fittings and installation in the unit price for pipe.

C. Polyvinyl Chloride (PVC) Pipe

1. Solid Wall PVC Pipe (SDR 35)

a. PVC pipe and fittings less than 15 inches in diameter shall conform to the requirements of ASTM Standard Specifications for Type PSM Polyvinyl Chloride (PVC) Sewer Pipe and Fittings, Designation D 3034. Pipe and fittings shall have a minimum cell classification of 12454B or 12454C as defined in ASTM D-1784. All pipe shall have a pipe diameter to wall thickness ratio (SDR) of a maximum of 35.

b. PVC pipe and fitting with diameters 18-inch through 27-inch shall conform to the requirements of ASTM D-17845 and ASTM F-679. Pipe and fittings shall have a minimum cell classification of 14545C. The minimum wall thickness shall conform to T-1 as specified in ASTM F-679.

c. Joints shall be push-on bell and spigot type using elastomeric ring gaskets conforming to ASTM D 3212 and F 477. The gaskets shall be securely fixed into place in the bells so that they cannot be dislodged during joint assembly. The gaskets shall be of a composition and texture which is resistant to common ingredients of sewage and industrial wastes, including oils and groundwater, and which will endure permanently under the conditions of the proposed use.

d. Pipe shall be furnished in lengths of not more than 13 feet. The centerline of each pipe section shall not deviate from a straight line drawn between the centers of the openings at the ends by more than 1/16 inch per foot of length.

e. PVC pipe shall not have a filler content greater than ten percent (10%) by weight relative to PVC resin in the compound.

f. PVC pipe shall be clearly marked at intervals of 5 feet or less with the manufacturer's name or trademark, nominal pipe size, PVC cell classification, the legend "Type PSM SDR 35 PVC Sewer Pipe" and the designation "ASTM D 3034", or "ASTM F-679". Fittings shall be clearly marked with the manufacturer's name or trademark, nominal size, the material designation "PVC", "PSM" and the designation 'ASTM D 3034", or "ASTM F-679".

g. PVC pipe shall have minimum pipe stiffness of 46 psi for each diameter when measured at 5 percent vertical ring deflection and tested in accordance with ASTM D 2412.

h. Five (5) copies of directions for handling and installing the pipe shall be furnished to the Contractor by the manufacturer at the first delivery of pipe to the job. PVC pipe installation shall conform to ASTM D-2321 latest revision.

i. Pipe shall be as manufactured by H & W Pipe Company, or equal.

D. Reinforced Concrete Pipe

1. All reinforced concrete pipe shall conform to the requirements of ASTM C76, latest edition. Class shall be as shown on the Drawings.

2. Joints shall be bell and spigot type using rubber Forsheda 138 or Forsheda 103 gaskets (or approved equal) and shall conform to ASTM C443.

3. The pipe shall be furnished in standard lengths of 8 feet to 16 feet.

4. The pipe shall be permanently marked showing the nominal inside diameter, manufacture date, ASTM C76 class, and manufacturer's name. These markings for 30-inch diameter and larger shall be inscribed on the pipe exterior and stenciled on the interior with paint or permanent ink.

5. There shall be no lift holes.

6. Pipe shall be as manufactured by Independent Concrete Pipe Company or approved equal.

7. Pipe Coatings

a. Interior Lining

(1) Description

All concrete pipe and fittings shall have a high build protective lining on the interior. All surface areas must be smooth without voids and projections, i.e. casting or manufacturing imperfections. Any patching of the interior of the concrete pipe shall be satisfactorily repaired by the pipe manufacturer by using a two component epoxy grout. No patching compounds containing a latex or acrylic base, or curing compounds shall be used on the interior surfaces of the concrete pipe to be lined. All rough and sharp edges on bells and spigots shall be rounded smooth with at least 1/8-inch radius.

(2) Lining Material

The material must be a high build multi-component amine cured novalac epoxy polymeric lining. The standard of quality is Inner-Liner by Vulcan Painters, Birmingham, Alabama. Equal products considered are Protecto Pipe Lining 1011 and PERMITE 9043 Type 2 polyamide epoxy. Any other alternates must be accompanied by the following:

(a) The permeability rating equal to the specified material when tested according to Method A of ASTM E-96-66, Procedure A, with a test duration of 42 days as reported by an independent laboratory.

(b) A statement from the Manufacturer of the submitted material attesting to the fact that at least 20% of the volume of the lining contains ceramic quartz pigment or similar inert material that will not be affected by the sewer liquids and gas.

(c) A laboratory report containing test data for immersion in acids, bases, and deionized water equal to the performance of the specified material using ASTM D-714-56 (1974) for the rating method.

(d) A statement concerning recoatability and repair to the lining.

(3) Concrete Pipe and Manholes

(a) Surface Preparation

All centrifugally cast concrete pipe shall have the interior fines, which include the gray layer of loosely-bound laitance, washed out at the time of manufacture. The intent is to expose tightly-bound concrete so that the lining will have a sound substrate for adhesion. After the pipe has cured the equivalent of seven (7) days at 77°F, the interior of the pipe exposed to liquids and gases shall be blasted and cleaned to remove all laitance, form oils, or other loose material. All none-water soluble grease or oils shall be removed by the pipe manufacturer before surface preparation by steam cleaning.

(b) Lining

After cleaning, the lining material shall be applied at 40 mils for the complete system using a centrifugal lance applicator. No lining shall take place over grease, oil, etc., that would be detrimental to the adhesion of the compound to the substrate. The compound shall not be applied when the substrate temperature is below 40°F or in adverse atmosphere conditions which will cause detrimental blistering, pinholing, or porosity of the film. In no case shall the lining be applied when the concrete surface is above 14% moisture content.

(c) Coating of Gasket and Spigot Ends

Due to tolerances, the joint areas must be coated with 6 mils, 10 mils maximum, Inner-Liner joint compound. It is the pipe manufacturer's responsibility to ensure that these tolerances are acceptable. This coating shall be hand-applied by brush to ensure a continuous protective

barrier. Care should be taken that the coating is smooth without excess buildup in the gasket area of the bell or on the gasket groove on the spigot end. All materials for the gasket groove and spigot end shall be applied after the application of the lining.

(4) Inspection and Certification

(a) Inspection

(a1) All concrete pipe and manholes shall be checked for thickness using a magnetic film thickness gauge on metal coupons attached to 5% of the pipe lined. **Note:** All dry film thickness shall be measured by application Specification No. 2 (SSPC-PA2 November 1, 1982).

(a2) The barrel of all pipe and fittings shall be pinhole-detected with a non-destructive 2,500-volt pinhole test. This test shall take place as soon as the lining is cured to prevent damage or contamination on the lining surfaces.

(a3) Each pipe joint and fitting shall be marked with the date of application of the lining system and with its numerical sequence of application on that date.

(a4) All pipe and fittings shall be inspected visually before and after installation, if possible, to ensure that any defect or damage to the pipe or lining is repaired prior to placing in service.

(b) Certification

The pipe or fitting manufacturer must supply a certificate attesting to the fact that the applicator met the requirements of this specification, and that the material used was as specified, and that the material was applied as required by the specification.

(5) Field Touch-Up

(a) Surface Preparation

(a1) The damaged or abraded area should be brushed vigorously with a wire brush or sanded with coarse sandpaper to remove all loose material. After the surface has been cleaned, care should be

taken to remove all dust from the cleaning operation. This can be accomplished by blowing-off with compressed air or by brushing with a dry brush.

(a2) Inner-Liner Joint Compound shall be used for touchup or repair and shall be mixed thoroughly in strict accordance with manufacturer's recommendations. After the material has been thoroughly mixed, apply to the prepared surface by either brush, roller, or airless spray. The material will be applied in one or two coats, as directed by the Engineer, depending on the size of the damaged area and whether it goes to the substrate or not. All touch-up shall be applied using the guidelines established for temperature and moisture content in paragraph for "Lining".

b. Exterior Coating

All reinforced concrete pipe shall be water-proofed on the exterior with asphalt coating. (Steel cylinder concrete pipe does not have to be water-proofed.)

PART 3 - EXECUTION

3.01 PIPE LAYING

A. All pipe shall be laid with ends abutting and true to the lines and grades indicated on the Drawings. The pipe shall be laid straight between changes in alignment and at uniform grade between changes in grade. Pipe shall be fitted and matched so that when laid in the trench, it will provide a smooth and uniform invert. Supporting of pipe shall be as set out in Section 02225 and in no case shall the supporting of pipe on blocks be permitted.

B. Before each piece of pipe is lowered into the trench, it shall be thoroughly swabbed out to insure its being clean. Any piece of pipe or fitting which is known to be defective shall not be laid or placed in the lines. If any defective pipe or fitting shall be discovered after the pipe is laid, it shall be removed and replaced with a satisfactory pipe or fitting without additional charge. In case a length f pipe is cut to fit in a line, it shall be so cut as to leave a smooth end at right angles to the longitudinal axis of the pipe and beveled to match the factory bevel for insertion into gasketed joints. Bevel can be made with hand or power tools.

C. The interior of the pipe, as work progresses, shall be cleaned of dirt, jointing materials, and superfluous materials of every description. When laying of pipe is stopped for any reason, the exposed end of such pipe shall be closed with a plywood plug fitted into the pipe bell so as to exclude earth or other material and precautions taken to prevent flotation of pipe by runoff into trench.

D. All pipe shall be laid starting at the lowest point and installed so that the spigot ends point in the direction of flow.

3.02 JOINTING

All joint surfaces shall be cleaned immediately before jointing the pipe. The bell or groove shall be lubricated in accordance with the manufacturer's recommendation. Each pipe unit shall then be carefully pushed into place without damage to pipe or gasket. All pipe shall be provided with home marks to insure proper gasket seating. Details of gasket installation and joint assembly shall follow the direction of the manufacturer's of the joint material and of the pipe. The resulting joints shall be watertight and flexible. **No solvent cement joints shall be allowed.**

3.03 UTILITY CROSSING CONCRETE ENCASEMENT

A. At locations shown on the Drawings, required by the Specifications, or as directed by the Engineer, concrete encasement shall be used when the clearance between the proposed sanitary sewer pipe and any existing utility pipe is 18 inches or less. Utility pipe includes underground water, gas, telephone and electrical conduit, storm sewers, and any other pipe as determined by the Engineer.

B. There are two cases of utility crossing encasement. Case I is applicable when the proposed sanitary sewer line is **below** the existing utility line. Case II is applicable when the proposed sanitary sewer line is laid **above** the utility line. In either case, the concrete shall extend to at least the spring line of each pipe involved.

C. Concrete shall be Class B (3000 psi) and shall be mixed sufficiently wet to permit it to flow between the pipes to form a continuous bridge. In tamping the concrete, care shall be taken not to disturb the grade or line of either pipe or damage the joints.

D. Concrete for the Work is not a separate pay item and will be considered incidental to utility pipe installation.

3.04 TESTING OF GRAVITY SEWER LINES

A. After the gravity piping system has been brought to completion, and prior to final inspection, the Contractor shall rod out the entire system by pushing through each individual line in the system, from manhole to manhole, appropriate tools for the removal from the line of any and all dirt, debris, and trash. If necessary during the process of rodding the system, water shall be turned into the system in such quantities to carry off the dirt, debris, and trash.

B. During the final inspection the Engineer will require all flexible sanitary sewer pipe to be mandrel deflection tested after installation.

1. The mandrel (go/no-go) device shall be cylindrical in shape and constructed with nine (9) evenly spaced arms of prongs. The mandrel dimension shall be 95 percent of the flexible pipe's published ASTM average inside diameter. Allowances for pipe wall thickness tolerances of ovality (from shipment, heat, shipping loads, poor production, etc.) shall not be deducted from the ASTM average inside diameter, but shall be counted as part of the 5 percent allowance. The contact length of the

mandrel's arms shall equal or exceed the nominal diameter of the sewer to be inspected. Critical mandrel dimensions shall carry a tolerance ± 0.001 inch.

2. The mandrel inspection shall be conducted no earlier than 30 days after reaching final trench backfill grade provided, in the opinion of the Engineer, sufficient water densification or rainfall has occurred to thoroughly settle the soil throughout the entire trench depth. Short-term (tested 30 days after installation) deflection shall not exceed 5 percent of the pipe's average inside diameter. The mandrel shall be hand pulled by the contractor through all sewer lines. Any sections of the sewer not passing the mandrel test shall be uncovered and the Contractor shall replace and recompact the embedment backfill material to the satisfaction of the Engineer. These repaired sections shall be retested with the go/no-go mandrel until passing.

3. The Engineer shall be responsible for approving the mandrel. Proving rings may be used to assist in this. Drawings of the mandrel with complete dimensioning shall be furnished by the Contractor to the Engineer for each diameter and type of flexible pipe.

C. The pipe line shall be made as nearly watertight as practicable, and leakage tests and measurements shall be made. All apparatus and equipment required for testing shall be furnished by the Contractor and the cost shall be included in the unit price bid for pipe and manholes.

1. The Engineer may require the Contractor to smoke test the first section (manhole to manhole) of each size of pipe and type of joint prior to backfilling, to establish and check laying and jointing procedures. The test shall consist of smoke blown into closed-off sections of sewer under pressure and observing any smoke coming from the pipe line indicating the presence of leaks. Other supplementary smoke tests prior to backfilling may be performed by the Contractor at his option; however, any such tests shall not supplant the final tests of the completed work unless such final tests are waived by the Engineer.

2. Where the groundwater level is more than 1 foot above the top of the pipe at its upper end, the Contractor shall conduct either infiltration tests or low pressure air tests on the completed pipeline.

3. Where the groundwater level is less than 1 foot above the top of the pipe at its upper end, the Contractor shall conduct either exfiltration tests or low pressure air tests on the completed pipeline.

D. Low-pressure air tests shall be performed on all gravity sanitary sewers to verify water-tightness of pipe joints and connections. The Contractor shall perform testing on each manhole-to-manhole section of sewer line after placement of backfill.

Testing of Polyvinyl Chloride (PVC) and Ductile Iron (DI) pipe sewer lines shall be performed in accordance with the current editions of ASTM F1417, "Standard Test Method for Installation Acceptance of Plastic Gravity Sewer Lines Using Low-Pressure Air," and UNI-B-6, "Recommended Practice for Low-Pressure Air Testing of Installed Sewer Pipe," respectively. Testing of reinforced concrete pipe sewer lines shall be performed in accordance with the current edition of ASTM C 924, "Standard Practice for Testing Concrete Pipe Sewer Lines by Low-Pressure Air Test Method."

All testing equipment shall be inspected by the Engineer to ensure that equipment is functioning properly.

The rate of air loss in the section under test shall be determined by the time-pressure drop method. The time required in minutes for the pressure in the section under test to decrease from 3.5 to 2.5 psig shall be not less than that indicated in the referenced standards.

Immediately following the low-pressure air test, the Contractor shall notify the Engineer of the test results. A Low-Pressure Air Test Report shall be completed by the Contractor during testing. The report shall be completed according to the procedures outlined in LFUCG's Construction Inspection Manual, current edition. A copy of the completed Low-Pressure Air Test Report shall be provided to the Engineer and LFUCG-Division of Water Quality for each test.

Pipes failing the pressure test will not be accepted and shall be repaired or replaced until a successful test is achieved.

When conducting a low-pressure air test, the Contractor shall securely install and brace all plugs prior to pressurizing the pipe. Personnel shall not be permitted to enter manholes when the sewer pipe is pressurized.

E. Infiltration tests (for concrete pipe only) shall be made after underdrains, if present, have been plugged and other groundwater drainage has been stopped such that the groundwater is permitted to return to its normal level insofar as practicable.

1. Upon completion of a section of the pipeline, the line shall be dewatered and a satisfactory test conducted to measure infiltration for at least 24 hours. The amount of infiltration, including manholes, tees and connections, shall not exceed 200 gallons per nominal inch diameter per mile of sewer per 24 hours.

F. Exfiltration tests (for concrete pipe only) which subject the pipeline to an internal pressure, shall be made by plugging the pipe at the lower end and then filling the line and manholes with clean water to a height of 2 feet above the top of the sewer at its upper end. Where conditions between manholes may result in test pressures which would cause leakage at the plugs or stoppers in branches, provisions shall be made by suitable ties, braces and wedges to secure the plugs against leakage resulting from the test pressure.

1. The rate of leakage from the sewers shall be determined by measuring the amount of water required to maintain the level 2 feet above the top of the pipe.

2. Leakage from the sewers under test shall not exceed the requirements for leakage into sewers as hereinbefore specified.

G. The Contractor shall furnish suitable test plugs, water pumps, and appurtenances, and all labor required to properly conduct the tests. Suitable bulkheads shall be installed, as required, to permit the test of the sewer. The Contractor shall construct weirs or other means of measurements as may be necessary.

H. Should the sections under test fail to meet the requirements, the Contractor shall do all work of locating and repairing the leaks and retesting as the Engineer may require without additional compensation.

I. If in the judgment of the Engineer, it is impracticable to follow the foregoing procedures for any reason, modifications in the procedures shall be made as required and as acceptable to the Engineer, but in any event, the Contractor shall be responsible for the ultimate tightness of the line within the above test requirements.

- END OF SECTION -